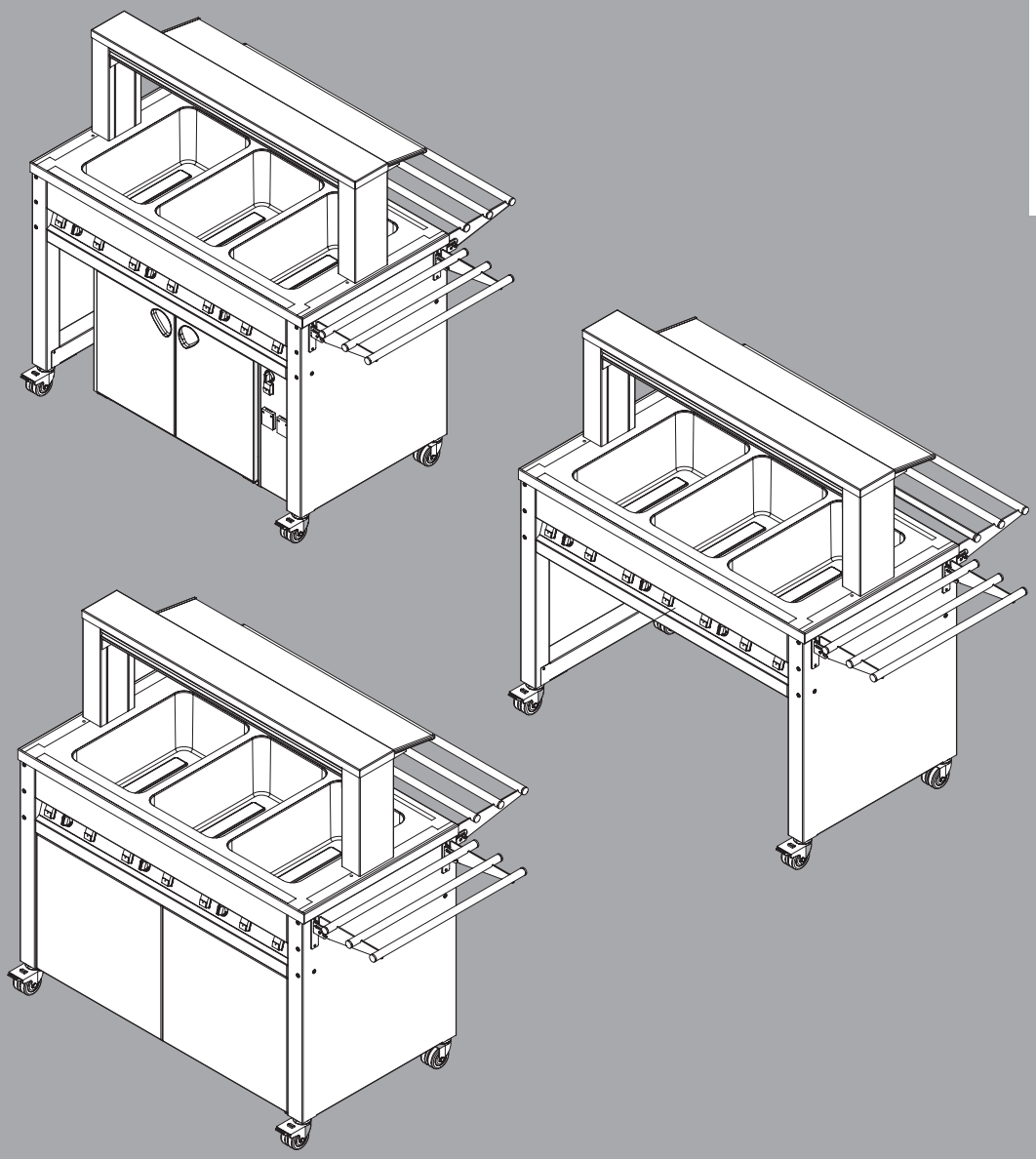

B.PRO
CATERING SOLUTIONS

HOT BUFFET
BASIC LINE W-3/4

Original operating instructions

Copyright

These instructions are protected by copyright.
None of this information may be reproduced, distributed, used to the advantage of our competitors, or made accessible to third parties either completely or in part.

Technical changes

Subject to modifications for the purpose of technical improvement.

Contents

1	**About these operating instructions**	**5**
1.1	Product documentation	5
1.2	Typographical conventions	5
1.3	Warnings	5
2	**About this product**	**5**
2.1	Scope of application	5
2.2	Conditions of use	6
2.3	Product features	6
3	**Safety**	**8**
3.1	Safe use	8
3.2	General information	8
3.3	Operator duties	9
3.4	Instruction of third parties	9
3.5	Scope of application	9
3.6	Conditions of use	9
3.7	Transport	9
3.8	Commissioning	9
3.9	Handling and operation	10
3.10	Change of location	11
3.11	Shutting down	12
3.12	Cleaning and care	13
3.13	Hygiene	13
3.14	Standards and guidelines	13
3.15	Product marking	13
4	**Additional information - Use in day-care centres and school catering**	**14**
5	**Transport**	**15**
5.1	Checking for/reporting transport damage	15
5.2	Scope of delivery	15
6	**Appliance overviews**	**16**
6.1	BASIC LINE W-3/4 product configuration	16
6.2	Unit model BASIC LINE W-3/4 with heated underframe	17
6.3	Operating elements	18
7	**Commissioning**	**19**
7.1	Carrying out initial cleaning	19
7.2	Positioning unit	19
7.3	Assembly	21
7.4	Connecting the unit	26
7.5	Putting unit into operation	26
8	**Handling and operation**	**28**
8.1	Connecting external units	28
8.2	Switching on heating mode	28
8.3	Loading the unit	30
8.4	Moving the unit to a new location	33
9	**Shutting down**	**34**
10	**Troubleshooting**	**34**

11	**Cleaning and care**	**36**
	11.1 Information on cleaning stainless steel	36
	11.2 Cleaning interval	37
	11.3 Cleaning methods	37
	11.4 Cleaning agents	37
12	**Cleaning the unit**	**38**
13	**Maintenance**	**40**
14	**Repairs**	**41**
	14.1 Spare parts	41
	14.2 Address	41
	14.3 Without being commissioned	41
15	**Disposal**	**42**
16	**Technical data**	**43**
17	**Ordering information and accessories**	**45**
18	**Standards, guidelines, inspection seal**	**45**
	18.1 Directives for CE marking/EU declaration of conformity	45
	18.2 Rules, regulations	45
19	**Maintenance work - form to be completed**	**46**

1 About these operating instructions

1.1 Product documentation

These are the original operating instructions.

Target group:

operating personnel, kitchen directors.

1.2 Typographical conventions

ⓘ **Explanatory information, reference** on special features or special cases
↳ **Cross reference** to a chapter or external document
✓ **Requirement** which must be met before the subsequent steps can be carried out.
➨ **Action or activity** which must be carried out.

Unit model XYZ
A section identified in this way applies only to a particular unit model or unit option.

1.3 Warnings

⚠ Signal word! Type and source of danger!
Possible consequences of non-compliance with warnings.
➨ Measures to avoid hazards and the consequences thereof.

The signal word (danger, warning, caution) indicates the level of danger.
Danger warns of possible highly severe/fatal bodily injury.
Warning warns of possible serious bodily injury.
Caution warns of possible minor bodily injury or damage to property.

2 About this product

2.1 Scope of application

The BASIC LINE hot buffet is designed for the following applications:
- Keeping food hot in Gastronorm containers
- Serving food, food distribution
- Self-service buffets

The BASIC LINE hot buffet is used for presenting and serving food.
The BASIC LINE hot buffet is primarily suited for use in catering facilities in schools, companies, government offices, hospitals, retirement homes (canteens, cafeterias and dining halls) and in the food service industry and hotels.
The following applications are **not** permitted:
- Heating up or preparing food
- Storing hot food for longer periods
- Use as room heating
- Transporting persons with or on the unit or its attachments
- Use as a substitute for a ladder, climbing aid or climbing frame
- Transport or storage of hazardous or toxic substances/liquids

2.2 Conditions of use

General information

The unit may only be used for the applications specified. The owner is responsible for ensuring appropriate and proper use of the unit. The unit may only be operated under the permissible ambient conditions. Users of the unit must be instructed on its operation and must have read and understood the operating instructions.

Environment

The unit may be used wherever the ambient temperature is between +15 °C and +38 °C and at normal humidity (without condensation) in closed rooms or in roofed areas where it will not be exposed to the weather.
ⓘ The unit has been developed for use up to 2000 m above sea level.

2.3 Product features

General information

The BASIC LINE hot buffet is a heated module with a stainless steel top surface and an underframe made of powder-coated galvanised thin sheet. Depending on the model, it has 3 or 4 seamlessly welded-in stainless steel bain-marie wells for holding Gastronorm containers. The temperature is controlled mechanically via a capillary tube thermostat. A safety glass pane serves as sneeze guard, optionally also available on the operator side. A warming bridge with 3 or 4 separately switchable radiant heaters keeps food warm, optionally with LED spotlights. The buffet has a fold-down tray slide and optional shelves. It is available in a reduced height (750 mm) and with heated unit compartments or a stainless steel base. The front panels can be customised in various colours and materials.

BASIC LINE units can be set in different variants:

- Free-standing for serving food with service or self-service
- Wall-standing for self-service (operating elements on customer side)
- Back-to-back for self-service

ⓘ Several units can be fixed permanently together at the side faces with optional module connectors (see Chapter 7.3.1 on page 21).

The standard BASIC LINE hot buffet model includes:

- Stainless steel top surface with 3 or 4 bain-marie wells, depending on the model
- Customer-side sneeze guard made of toughened safety glass
- Fold-down stainless-steel tubing tray slide on customer side
- Heat bridge with 3 or 4 individually switchable radiant heaters, depending on the model
- 4 steering castors, 75 mm in diameter, 2 of which have brakes
- Side faces and panels made of powder-coated, galvanised thin sheet

Handling and operation

The unit can be loaded in the following ways:

- *Dry* loading:
  Gastronorm containers are hung in the dry bain-marie wells
- *Wet* loading:

ⓘ Recommended loading method
Gastronorm containers are hung in the bain-marie wells filled with 4 litres of hot water

- When one or two support crossbars are used across the unit, the Gastronorm containers GN 1/2, GN 1/4, GN 2/3, GN 1/3, GN 1/6, GN 2/8 and GN 1/9 can be hung in the bain-marie wells.
- When one or two support crossbars are used lengthwise, Gastronorm containers GN 2/4, GN 1/4 and GN 1/6 can be hung in a bain-marie well.
- Each bain-marie well can be heated separately. Rotary knobs provide continuous temperature adjustment with "10" equal to a temperature of about +95 °C. The optional heated unit compartments can be used to keep food hot in Gastronorm containers. The two unit compartments are heated together. A rotary knobs provides continuous temperature adjustment with "10" equal to a temperature of about +85 °C.

2.3.1 Options and accessories

The BASIC LINE hot buffet is available with the following optional equipment:

Optional Equipment	Details
Switch panel cover	–
Heated underframe with two compartments	–
Digital temperature display for the heated underframe	–
Also 2 x 230 V socket outlets in the underframe	–
Base bottom	–
Module attachment set	–
Body in a variety of colours	–
Front panelling in different colours and different designs (powder-coated and Resopal)	–
Bridge attachment	– Standard attachment – Highline attachment
Lighting/radiant heaters	– With LED lighting – With radiant heaters – With radiant heaters and LED lighting
Sneeze guard made of toughened safety glass	– Up to top surface on customer side – On customer side with pass-through – On operator side with pass-through
Tray slide	– Round tube, customer side – Round tube, operator side – Smooth stainless steel, customer side – Smooth stainless steel, operator side – Resopal, customer side – Resopal, operator side
Plate slide	– Smooth stainless steel, customer side – Smooth stainless steel, operator side – Resopal, customer side – Resopal, operator side
Shelf, short side left/right	– Round tube – Smooth stainless steel – Resopal
Assembly	– 4 steering castors, 75 mm in diameter, 2 of which have brakes – 4 steering castors, 125 mm in diameter, 2 of which have brakes – Adjustable feet, stainless steel
Skirting panel	– Skirting panel customer side – Skirting panel, operator side – Skirting panel, short side, left – Skirting panel, short side, right
Mains connection	– 230 V – 400 V

2.3.2 Warning signs

ⓘ The following warning signs are mounted to the unit:

Warning sign	Meaning – Mounting position
	Label: **"Maximum load capacity"**
	"Potential equalisation" in accordance with DIN IEC 60417 Attached at the right-hand lower section on the operator's side, directly next to the potential equalisation conductor connection on the end face
	"Warning of hot surface" in acc. with DIN 4844-2 Mounting position: on the optional heat bridge

➨ Replace any illegible, damaged or missing warning signs **immediately**.

3 Safety

3.1 Safe use

➨ Carefully read and comply with the operating instructions before commissioning and using the appliance for the first time.
➨ Read and observe the information on safe use, safety instructions and warnings.
➨ Store the operating instructions so that they are accessible to the operating personnel at all times.

3.2 General information

The unit has been built using state-of-the-art technology. All the requirements necessary to ensure safe operation have been met. Nevertheless, residual risk does exist when operating the unit. The safety precautions and warnings in these operating instructions are there to help you protect yourself against these hazards. Improper use of the unit can lead to serious injury or damage.

➨ The unit may only be used by persons whose physical, sensory or mental abilities are not subject to any restrictions relevant to operating the unit.
➨ Secure the unit against accidental use if it is damaged. Have an authorised service point perform repairs immediately.

Electric shock due to electrical charge, danger of short-circuit!

➨ The unit must be disconnected from the power supply for cleaning and maintenance work and when replacing parts. During this work, the mains plugs and/or unit plugs should be kept in a secure and dry place, protected against moisture, damage and dirt.

Risk of explosion! Fire hazard!

➨ Fire hazard, in particular through naked flames, electric or static sparks generated by static charge, and hot surfaces! If containers with explosive materials are stored in the unit and the unit is put into operation, this may cause an explosion and subsequent injury and damage to property.
➨ Do not store any explosive materials, such as aerosols with flammable propellant, in the unit.
➨ Avoid naked flames in the usable space of the unit.

Warnings

➨ Observe the warnings with the danger symbol (warning triangle) in the text.

3.3 Operator duties

The owner is responsible for ensuring that all users have read these instructions before operating the unit.

- Make sure that users of the unit are instructed in its operation and have understood these operating instructions.
- Make sure that users are aware of the hazards that the unit presents and that they are able to assess them.

3.4 Instruction of third parties

If the unit is lent to third parties, these persons must be instructed in the safe handling of the unit and possible dangers must be pointed out.

3.5 Scope of application

The operator is responsible for ensuring that the unit is used properly and only for the application specified.

- Only use the unit for the intended application.

3.6 Conditions of use

Danger of tipping!

- The unit can tip over and cause serious injuries and damage to property.
- Do **not** use the unit as a makeshift ladder or allow children to climb on it.
- Keep the unit away from children.
- The unit may only be operated under the permissible ambient conditions.
- The unit is only to be used when it is in proper working order.
- Secure the unit against accidental use if it is damaged.
  If the unit is damaged or a fault occurs, **stop** using the unit, disconnect the mains plug and have repairs performed by an authorised service point.

"Repairs" on page 41

3.7 Transport

Heavy unit that may tip over!

Improper unit transport can lead to serious injury or damage.

- Transport the unit **only** when upright (sufficiently secured on a pallet).

Material damage to the appliance due to improper transport!

- Transport the appliance only on a lorry with a sufficiently dimensioned loading ramp or in a delivery van.
- Make sure that the loading ramp does **not** exceed an angle of inclination of 10°.
- Secure the appliance on the pallet so that it cannot slip (safety straps).

Appliance with optional braked castors

Braked castors are **not** sufficient restraint for transport.

- Secure the unit against vertical movement during transport.
- Use padded locking bars.
- Make sure that the unit is secure and cannot slide during transport or fall from the loading area.

3.8 Commissioning

- Remove all protective film when unpacking the unit.

The unit may only be installed/operated in a well-ventilated environment.

- Do not block any ventilation slots that are provided.

Electric shock due to electrical charge, danger of short-circuit!

When the unit is brought from a cold storage room to a kitchen, moisture from the air in the room condenses on the surface of the unit. Due to the film of moisture that forms on the appliance, there is a risk of a short circuit or electric shock when the appliance is connected.

- Only operate the unit once it has reached room temperature.
- Only operate the unit on an even, firm surface.
- Do **not** operate the unit next to equipment which emits large amounts of steam, such as a dishwasher.

Wrong mains voltage! Missing circuit breaker!

- Improper handling of the mains plug and mains connection can lead to serious injury or damage.
- Make sure that the mains voltage and frequency on the rating plate correspond with those for the mains socket outlet.
- Only connect the unit to a socket outlet that is protected with a fault-current protective device (residual-current circuit breaker). Make sure that every phase is also fused with max. 16 A.
- When connecting to a fixed electrical connection on site, ensure that an all-pole disconnecting device is installed at all times. Secure the installation against unintentional switching on.

Damaged mains plug! Damaged mains cable!

- The unit must **not** be used if the insulation on the mains cable or the mains plug is damaged.

Damaged electrical system and mains socket outlet!

- Switch the unit off at the mains switch before disconnecting the power supply.
- Insert or remove the mains plug only when the unit is switched off. Failure to do this may damage the unit electrical system and/or the mains socket outlet.
- When removing the mains plug, only pull the main plug housing and **not** the mains cable.

Appliance with optional braked castors

- Always apply the castor brakes to prevent the unit from rolling away. The unit can cause injury and property damage if allowed to roll away accidentally.

Unit model with adjustable feet

All adjustable feet must be regulated to ensure that the unit stands firmly and does not wobble.

3.9 Handling and operation

Unsecured unit!

The unit may cause personal injury and damage to property if it rolls away unintentionally.

- Always apply the castor brakes to prevent it from rolling away.
- Always keep lids on Gastronorm containers containing food.
- Always cover food on plates with cloches.

Impaired food quality!

The quality of the food in the unit may be impaired if a power failure, unit malfunction or other interruptions occur during storage or regeneration.

- Check the core temperature to see whether the quality of the food might be impaired.
- Dispose of food if necessary.

Unit model with heated unit compartments

Avoid opening the unit doors unnecessarily when heating is active. Only open unit doors briefly when loading or removing Gastronorm containers. Only place covered, stainless-steel Gastronorm containers inside the heated unit compartments.

Danger of burns and scalding! Hot unit parts, objects and food!

The bain-marie wells, heated unit compartments and objects contained therein can reach temperatures up to 95 °C during operation and cause burns. The temperatures at which the food is being held can also cause scalding. Besides the bain-marie well, the top surface and the outer surfaces of the heat bridge become hot during operation.

- Persons handling hot objects must wear protective gear such as protective gloves.

Danger of burns! Hot protective screen!

The protective grilles of the radiant heaters become hot during operation and can cause burns if touched.

- **Do not** touch the protective grilles during operation.

Risk of corrosion! Avoidance of fatigue cracking in the bain-marie wells!

- Avoid fatigue cracking in the bain-marie wells: **Do not** pour cold water into bain-marie wells when they are hot. The sudden change in temperature can cause micro cracks which act as sites where corrosion can start.
- Allow bain-marie wells to cool down before pouring cold water into them, or use hot water when filling hot bain-marie wells.

Risk of injury! Overloading and damage to the attached parts!

If attached parts are overloaded they may break or give way, which can allow objects to fall and cause injuries. Damaged attached parts, especially if they are brittle or unstable, can cause trip hazards.

- As a general rule, attached parts may not be swung out except when the unit is in use.
- The attached parts may not be subjected to surface loads greater than the loads specified in these operating instructions.
  Particular attention must be paid to ensure that the optional locking pin or the optional mini-catch in the bracket is locked into position correctly when the attachment is folded up or down.
- Do not place any objects on the heat bridge or on the standard sneeze guard.
- Use attached parts only to carry crockery and/or trays; do not place heavy objects on them.
- To ensure structural integrity and avoid injuries, persons must **never** sit on the attached parts.

Permissible surface load per attachment:

- Tray slide: 25 kg
- Shelf/plate slide: 25 kg
- Unit base: 100 kg
- Highline sneeze guard (customer or operator side): 10 kg

3.10 Change of location

Risk of injury and damage to property! Falling objects!

Whilst the unit is being pushed, objects could slip off the shelves or out of the unit; such objects could injure persons in the vicinity. The objects could be damaged and the unit itself could be damaged.

- In order to ensure electrical safety, withdraw the mains plug for the unit before any change of location
- Remove all objects from the shelves, including the optional floor of the unit.
- Always bring the unit to its new location at a sensible speed (**no** faster than 3 km/h – equivalent to a slow walking pace).
- Due to the low floor clearance, transport the unit over inclined surfaces or ramps with a suitable means of conveyance, such as a pallet truck.

Transport damage and risk of injury!

Improper transport can lead to personal injury and damage to the unit and other property.

- Ensure that the location of the appliance satisfies the current issue of the ordinances, regulations, other trade association rules and, if applicable, other national regulations of the countries.
- Avoid impacts.
- **Do not** traverse bumps or steps.
- **Do not** traverse uneven floors.
- The unit should be pushed only, **never** pulled.

Danger of tipping!

This unit can tip over and cause serious injuries and damage to property.

The unit can be tilted to an angle of 10° when stationary before it is at risk of tipping over.

- Hold unit door closed while changing its location.
- Only sloped surfaces with an incline of <10° may be crossed.

Unit model with heated unit compartments

- Keep unit doors closed while changing location.
- Before a change of location, remove all objects such as Gastronorm containers from the compartments.

Appliance with optional braked castors

This unit can tip over and cause serious injuries and damage to property.
The unit can be tilted to an angle of 10° when stationary before it is at risk of tipping over.

- If the appliance is standing on an inclined area:
  In addition to the locked castor brakes, secure the appliance against unintentional rolling away using further safety measures (e.g. wheel chocks).
- Before transporting the unit, check that the castor brakes are working properly by positioning the unit on a flat surface and locking the castors.
- Ensure that the appliance is stable, and will not roll or slide.
- If there are signs of damage to the roller castors or inadequate braking performance:
  Do not use the appliance, but have the defective castor(s) replaced immediately by an authorised service centre.

"Repairs" on page 41

Accidental unit movement!

Defective castor brakes or poor braking performance can cause the unit to roll away unintentionally and result in personal injury and damage to property.

- Do **not** move the unit when the castor brakes are applied.

Unit model with adjustable feet

- Carry the unit with suitable means of conveyance such as a pallet truck.
  You must observe the applicable industrial safety regulations and other information in doing so.

Risk of crushing!

When transporting the appliance, hands may become trapped and crushed between the wall and the appliance.

- Keep hands and fingers away from the wall or unit when pushing.
- When transporting the appliance, ensure there is no failure to see persons or objects in front of the appliance.

Heavy unit that may tip over! Excessive speed!

- If people cannot see over the top of the appliance:
  When the appliance is being transported, have another person walk in front of it to ensure safe movement.
- In circumstances of restricted visibility, unclear transport situations and when driving over ramps, hollows and sloping surfaces: Always provide an additional person for safety.

"Traversing ramps, recesses, inclined surfaces" on page 19

- **Two** people (one at each side wall of the unit) are required to move the unit over ramps or recesses.
- If you push with just one hand, this may prevent you from applying the brakes quickly enough if the unit is heavy.
- Ensure that the person moving the appliance to its new location is able to slow down the loaded appliance in the event of an emergency.

3.11 Shutting down

Damaged electrical system and mains socket outlet!

Unplugging the appliance when it is switched on can damage both the appliance electrics and the mains socket.

- Switch the unit off using the on/off switch before disconnecting the power supply.
- Pull out the mains plug to disconnect the unit from the power supply.
- External devices connected to the unit socket outlets must also be switched off before you connect or disconnect the mains plug.
- When removing the mains plug, only pull the main plug housing and **not** the mains cable.
- Store the mains plug safely, protected from dirt and moisture.

3.12 Cleaning and care

- Before performing cleaning (see Chapter 11 on page 36) withdraw the mains plug to avoid short circuits and electric shocks.
- Comply with the provisions of Regulation (EC) No. 852/2004 and the national hygiene regulations.
- Clean the unit after each use, without using high-pressure cleaning equipment or steam jet units. To avoid damage, do not use metal parts, sharp objects or abrasive cleaners.
- Hot parts such as the bain-marie wells and unit compartments can cause burns, so allow the unit to cool down for 20 minutes.
- After cleaning the unit, dry it thoroughly, especially the unit base and the heated compartments, to prevent creation of slip hazards due to leakage of water.

Danger of burns! Hot unit parts and objects!
The bain-marie wells, heated unit compartments and objects contained therein can reach temperatures up to 95 °C during operation and cause burns.
- Allow the unit to cool for at least 20 minutes before cleaning.

Short-circuit due to water penetrating the unit electrical system and mains plug!
- Disconnect the unit from the power supply before cleaning or maintenance work or replacing parts.
- During these tasks, store the mains and/or unit plug in a suitable, dry place and protect against moisture, damage and dirt.

Danger of slipping!
- After cleaning the unit, dry it thoroughly.
  Also remove any cleaning water from the optional unit base and the optional heated compartments.
- Completely wipe up any cleaning water which leaks out of the unit.

3.13 Hygiene

- When keeping food hot, observe the relevant regulations on foodstuffs as well as the characteristics of the food in question.
- Comply with the provisions of Regulation (EC) No. 852/2004 and the national hygiene regulations of the countries.

Sneeze guard

Intermeshed fragments! Risk of injury obstruction of vision!
This eliminates the risk that the sneeze guard of safety glass (ESG) will suffer undetected damage due to collisions and impacts. When damaged, safety glass shatters into small partially intermeshed fragments. Because of this special fracture structure of ESG, the risk of injury is very low.
- To maintain the protective function and to exclude the risk of injury, replace damaged glass immediately.
- Remove broken glass immediately as it can obstruct visibility.
- Dispose of food from the affected unit.

3.14 Standards and guidelines

The owner is responsible for compliance with the applicable standards, guidelines and safety regulations.
- Observe the applicable standards, guidelines and safety regulations.

3.15 Product marking

The unit is provided with a rating plate (see Chapter 14.4.1 on page 41).
ⓘ The warranty is voided if the rating plate is removed.

4 Additional information - Use in day-care centres and school catering

ⓘ This additional information describes the assessable, additional residual risks as a result of the access of children/young people to the product.

⚠ Risk of locking in children!

The appliance has compartments that are large enough for a child to climb into.

- **Never** leave the unit unattended.
- Always **check** to ensure that there are no children or animals in the compartments before commissioning or disposing of the unit.

⚠ Danger of burns! Hot surfaces and unit compartments/accessories!

For proper operation it is necessary that the unit can achieve surface temperatures higher than 60 °C. Prolonged skin contact with these high temperatures can cause burns.

- Touch hot surfaces only when suitable protective measures are being used.

⚠ Crush hazard for extremities

The appliance has door hinges in which limbs (e.g. fingers when opening and closing the appliance door) can become trapped and crushed.

- When opening and closing the appliance door, ensure that there are no limbs present in the door opening or door hinges.

General information and special dangers

Application

- The unit may only be used for the scope of application specified in these operating instructions.

Duty to supervise

- The unit must **not** be moved or operated without supervision.

The duty of supervision is essentially based on the applicable laws and regulations adopted by relevant national authorities, such as the legislator, the employer's liability insurance associations, regulations on a state or municipal level and/or other authorities.

Power supply

Usage of an electrically operated unit increases the supervisor's duty to provide supervision.

- Do **not** operate the unit without supervision.

ⓘ **B.PRO recommends:**

- Operate the unit on socket outlets which can be disconnected at a main or central switch.
- Make sure that this main or central switch is installed out of the reach of children.
- Avoid subjecting the mains cable to tensile strain. This same applies when using a helix cord.

Improper use as a toy

Improper use as a toy can cause the unit to tip and result in injury.

- Do **not** climb on the unit.

Improper use as a storage space

- The unit must **not** be used as a storage space for objects and/or living beings.

Improper use as a vehicle

The unit must **not** be used as a vehicle or a means of transport.

- **Do not** lie under the unit.

The unit is very heavy and has a high potential momentum when moving. If the unit is misused as described above, it may cause injury as people can be run over or crushed, for example.

Castor brakes

The castor brakes have openings that are part of their technical design. If the castor brakes are applied without supervision, these openings can lead to crushing of extremities.
The appliance can be set in motion if a castor lock is opened inadvertently.

- After the appliance has been positioned at its intended location initially or after a change of location: Apply the available castor brakes.

General safety instructions when dealing with children.

- To ensure safe handling of this unit when children are present, please comply with all safety instructions listed in the Safety Chapter (see Chapter 3.1 on page 8).

5 Transport

5.1 Checking for/reporting transport damage

This procedure ensures that damage claims are handled correctly.
If transport damage is reported at a later point in time, the recipient **must** provide suitable evidence of this.

- The unit must be checked for damage incurred during transport immediately after delivery (Visual inspection).
- Document any transport damage on the waybill in the presence of the carrier (Description of the defect).
- Have the carrier confirm the damage. (Signature).
- Retain the unit and notify B.PRO of the damage, enclosing the waybill.
  – or –
- Do **not** accept the unit and return it to B.PRO via the carrier.

5.2 Scope of delivery

The exact scope of delivery and the design of the appliance are documented in the delivery documents.

Standard scope of delivery

(1) Unit/module
(2) Operating instructions

Unpacking

- Open the transport packing at the places provided.
- **Do not tear open** the transport packaging and **do not cut it open**.
- Check the scope of delivery.
- Remove any protective film from the unit.
- Remove any protective film from inside the compartments.

Disposing of packaging material

Packaging materials are recyclable.

- Recycle packaging materials in a proper, environmentally responsible manner as per applicable statutory requirements.

6 Appliance overviews

6.1 BASIC LINE W-3/4 product configuration

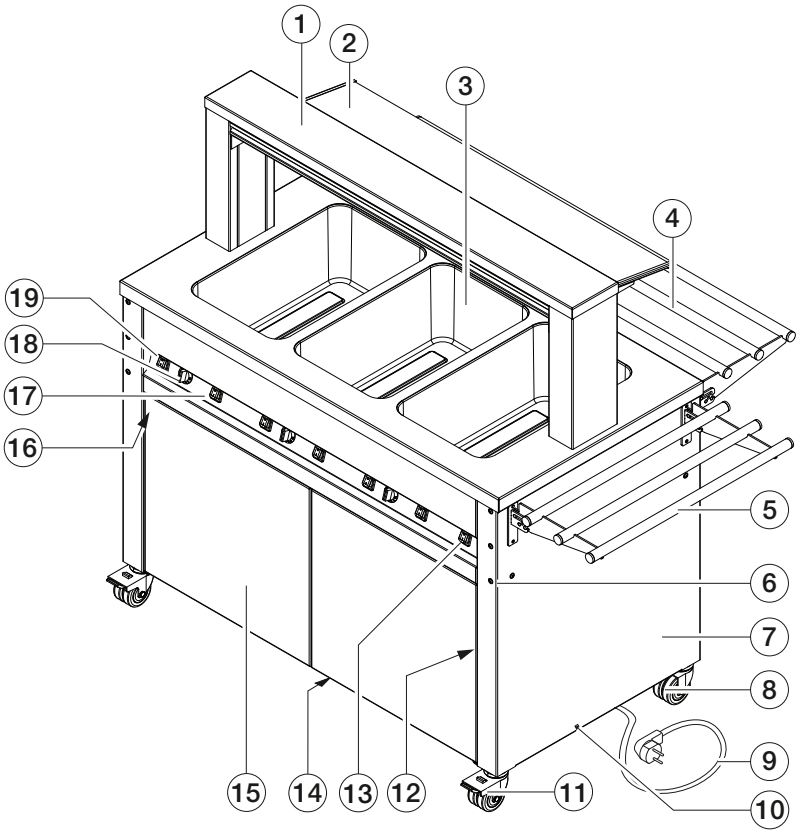

(1) Heat bridge with ceramic radiant heaters
(2) Customer-side sneeze guard
(3) Bain-marie well
(4) Fold-down stainless-steel tubing tray slide on customer side
(5) Mounts for fastening optional shelf
(6) Mounts for fastening operator-side fold-down tray slide
(7) Side face underframe
(8) Steering castor
(9) Mains cable with mains plug
(10) Potential equalisation sticker (connection on the unit lower surface)
(11) Steering castor with castor brake
(12) Socket outlets to connect external units (optional)
(13) On/off switch for lighting in the heat bridge (optional)
(14) Unit base (optional)
(15) Operator-side hinged doors (optional)
(16) Drain valve
(17) On/off switch for ceramic radiant heater in the heat bridge
(18) On/off switch for bain-marie well heating
(19) Rotary knob for setting the setpoint temperature for bain-marie wells

6.2 Unit model BASIC LINE W-3/4 with heated underframe

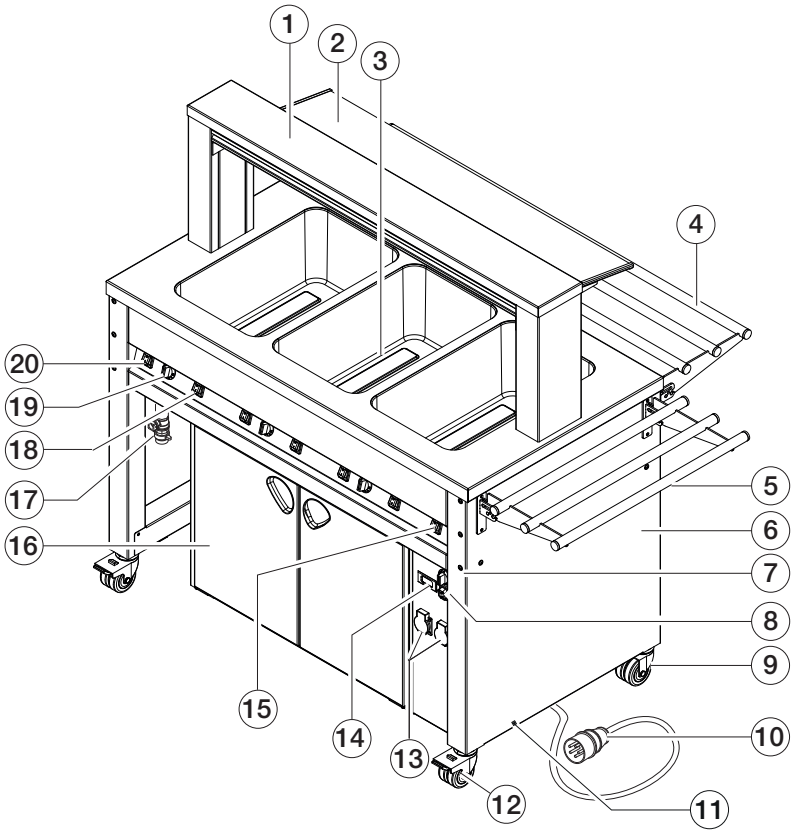

(1) Heat bridge with ceramic radiant heaters
(2) Customer-side sneeze guard
(3) Bain-marie well
(4) Fold-down stainless-steel tubing tray slide on customer side
(5) Fold-down shelf on the side faces (optional)
(6) Side face underframe
(7) Mount for fastening operator-side fold-down tray slide
(8) On/off switch for unit compartment heating (optional) and rotary knob to set the setpoint temperature for the heated unit compartments
(9) Steering castor
(10) Mains cable with mains plug
(11) Potential equalisation sticker (connection on the unit lower surface)
(12) Steering castor with castor brake
(13) Socket outlets to connect external units (optional)
(14) Digital temperature display for heated unit compartments (optional)
(15) On/off switch for lighting in the heat bridge (optional)
(16) Heated unit compartments (optional)
(17) Drain valve
(18) On/off switch for ceramic radiant heater in the heat bridge
(19) On/off switch for bain-marie well heating
(20) Rotary knob for setting the setpoint temperature for bain-marie wells

6.3 Operating elements

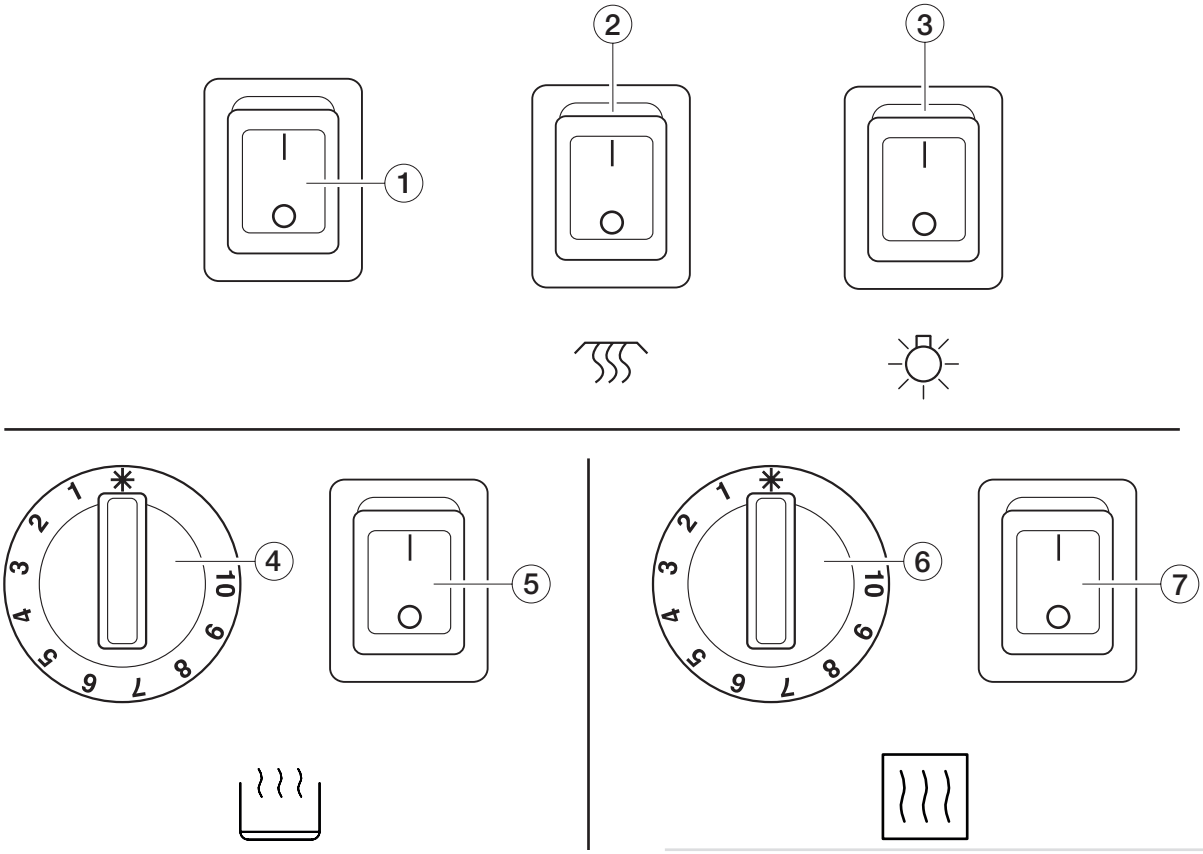

Bain-marie wells, unit compartments, radiant heaters, lighting

(1) On/off switch for integrated LED operation indicator
(2) On/off switch for radiant heater
(3) On/off switch for lighting
(4) Rotary knob for setting the "Bain-marie well" setpoint temperature
(5) On/off switch for bain-marie well
(6) Rotary knob for setting the "Unit compartment heated" setpoint temperature
(7) "Unit compartment heated" on/off switch

ⓘ The rotary knob can be adjusted continuously to set the required setpoint temperature for each individual bain-marie well. The setting value "10" corresponds to a maximum setpoint temperature of around +95 °C.

Unit model with heated unit compartments

The rotary knob can be adjusted continuously to set the required setpoint temperature in unit compartments for all compartments. The setting value "10" corresponds to a maximum setpoint temperature of around +85 °C. The temperature in the unit compartments can be read on an optional digital display.

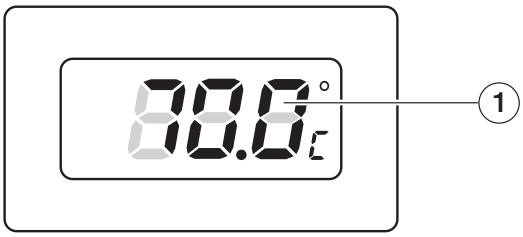

(1) Digital temperature display for heated unit compartments (optional)

7 Commissioning

7.1 Carrying out initial cleaning

⚠ Caution! Wrong mains voltage, wrong mains frequency!
The unit electrical system may suffer damage if the unit is not designed for the available mains voltage or frequency.
- ➨ Before connecting the appliance, check that the mains voltage and mains frequency specified on the rating plate match the corresponding values of the mains socket.

- ➨ Perform an initial cleaning of the appliance after delivery.
- ➨ Remove all cardboard, protective paper layers, film and adhesive tape.
- ➨ Clean surfaces with suitable cleaning agents (see Chapter 11 on page 36)

Prerequisites for operation
- ✓ Unit has reached room temperature and is dry
- ✓ Unit is in absolutely hygienic condition
- ✓ Unit and mains plug have no known defects or visible damage
- ✓ Protective films removed

7.2 Positioning unit

Location selection
When selecting where to place the unit to ensure that it can operate to optimum effect, comply with the following points:
- Operate the unit far away from equipment which emits large amounts of steam, such as a dishwasher.
- Set up/operate the unit in a well-ventilated environment only.

7.2.1 Traversing ramps, recesses, inclined surfaces

⚠ Caution! Heavy unit that may tip over! Excessive speed!
If you move the unit too fast, you may not be able to brake it in an emergency. The unit can tip over and cause injuries and damage to property.
- ➨ Do **not** push the appliance at a speed faster than 3 km/h (equivalent to slow walking).
- ➨ Push unit in such a way that you can brake whenever required.
- ➨ **Two** people should push the unit when the field of vision is limited, during complicated transport manoeuvres and while traversing ramps, hollows and inclined surfaces.

You can ensure that units are stable in their position if you observe the following points:
- The designated space for the unit is flat and guarantees that the unit is level when installed.
- ➨ Lock castor brakes on castor models.
- If the unit has the optional adjustable feet, align the unit so that it is horizontal and stable and doesn't wobble.
- ➨ Ensure that unit is stable in its designated space.

↳ "Change of location" on page 11
↳ "Traversing ramps, recesses, inclined surfaces" on page 19

Unit model with castors

⚠ Caution! Risk of extremities being crushed or caught
Extremities can be crushed and people injured when modules are pushed together. If the unit is heavy, you may not be able to apply the brakes quickly enough if you push the unit with just one hand.
- ➨ When pushing the unit, always place both hands on the top surface.
- ➨ Be careful not to pinch your hands between the unit and walls or other objects, such as cabinets.

Unit model with unit base

Caution! Damage caused by unit base hitting the ground
The unit may hit the ground and become damaged or immovable due to low ground clearance when traversing ramps, recesses or inclined surfaces.
- Use suitable other means of conveyance, such as a pallet truck, to transport the unit over ramps and inclined surfaces.

- ✓ Two people
- ✓ Unit is switched off
- ✓ Unit is disconnected from the power supply
- ✓ Store the mains plug safely, protected from dirt and moisture.
- Check whether the unit can be safely pushed over the ramp, recess or sloped surface.
- Carefully push the trolley over the ramp, recess or slanted surface with **two** people.

7.2.2 Setting up the appliance with adjustable feet

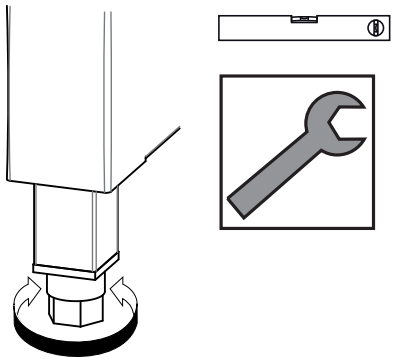

- Install the unit in the designated location.
- Align the unit vertically by adjusting the feet.

7.2.3 Setting up the appliance with castor brakes

Warning! Insufficient holding force from castor brakes!
The holding effect of the castor brakes may **not** be sufficient on ramps.
The unit can start to move and cause injuries.
- When parking the unit on a ramp, lock the castor brakes and also secure the unit against rolling away with items such as chocks.

Caution! Pinched foot on castor brakes!
You can pinch or injure your foot when releasing or locking the castor brakes.
- Ensure that your foot **is not** crushed between the roller castors and the corner joint.
- Take appropriate precautions on uneven routes.
- ✓ Do not place objects on top of the unit
- ✓ **Two** people

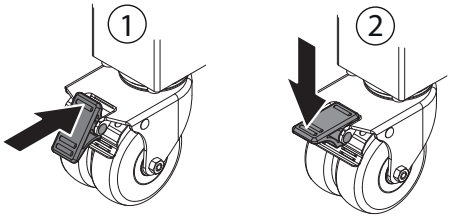

- Release the castor brakes (1).
- Using both hands, carefully push the appliance to the intended location.
- Lock castor brakes (2).

7.3 Assembly

7.3.1 Attaching/unfastening module connectors

➨ Assemble the modules as shown in the following diagrams.

You can disassemble them in the same way, but in reverse.

ⓘ You must carry out the individual assembly steps on both the customer side and the operator side.

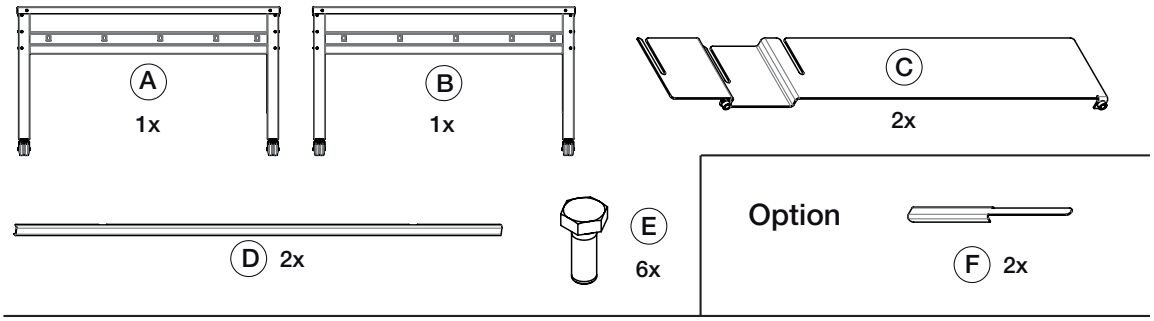

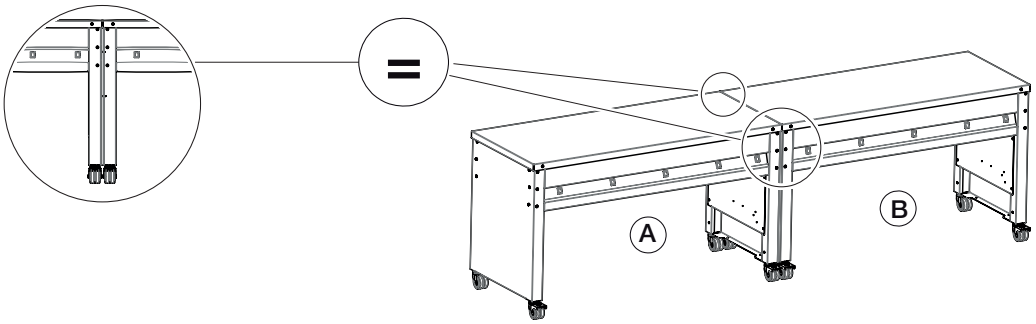

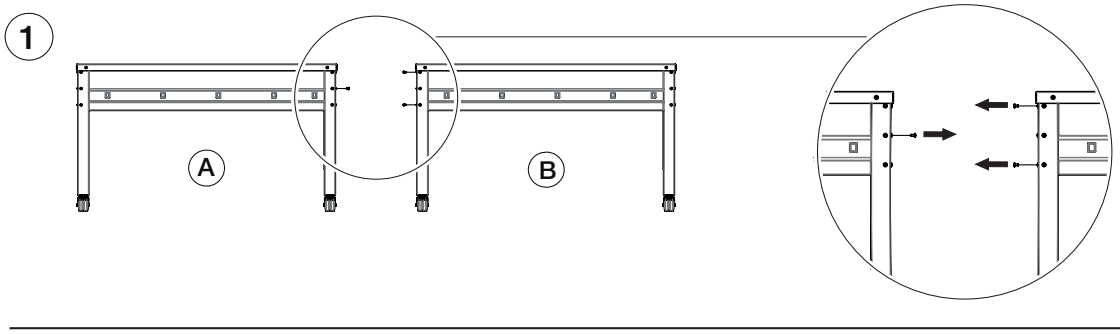

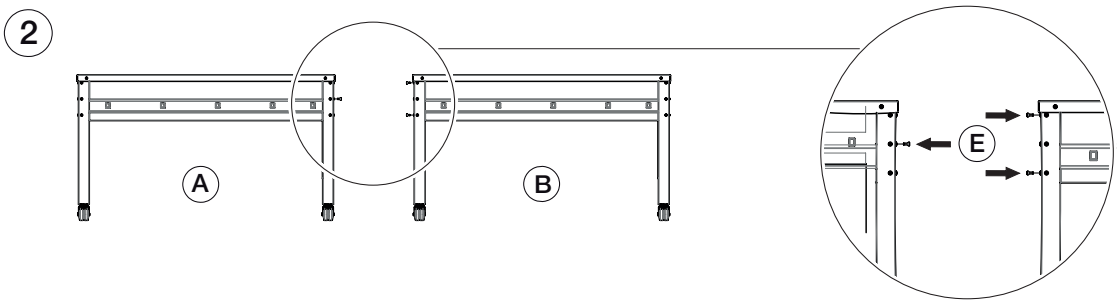

➨ Check that you have all parts required to assemble the units (C, D, E, F).

➨ Undo the pre-fitted screws in modules A and B (1).

➨ Fasten screws E into modules A + B (2).

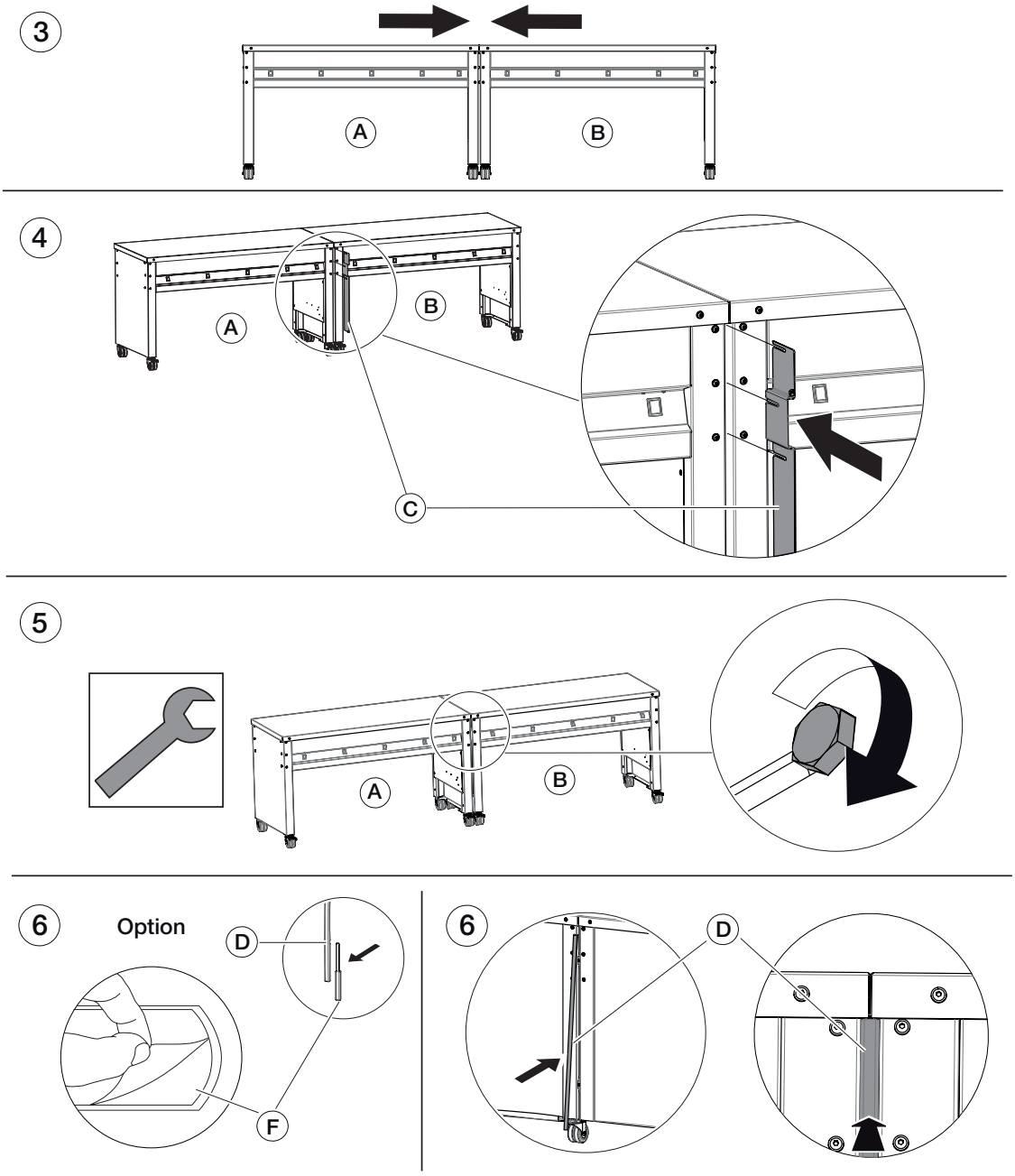

- Push modules A + B together (3).
- Insert connecting profile C (4).
- Use the spanner to fasten the hexagon socket screws E (5).

Unit model with adjustable feet

- Remove the adhesive tape protective film on extension piece F.
- Bond extension piece F to section profile D (6).

- Attach section profile D to connecting profile C (6).

7.3.2 Attaching/detaching skirting panels

Unit model with adjustable feet

- Assemble the skirting panels as shown in the following diagram.

You can disassemble them in the same way, but in reverse.

- Repeat the same assembly steps on each skirting panel on the opposite side.

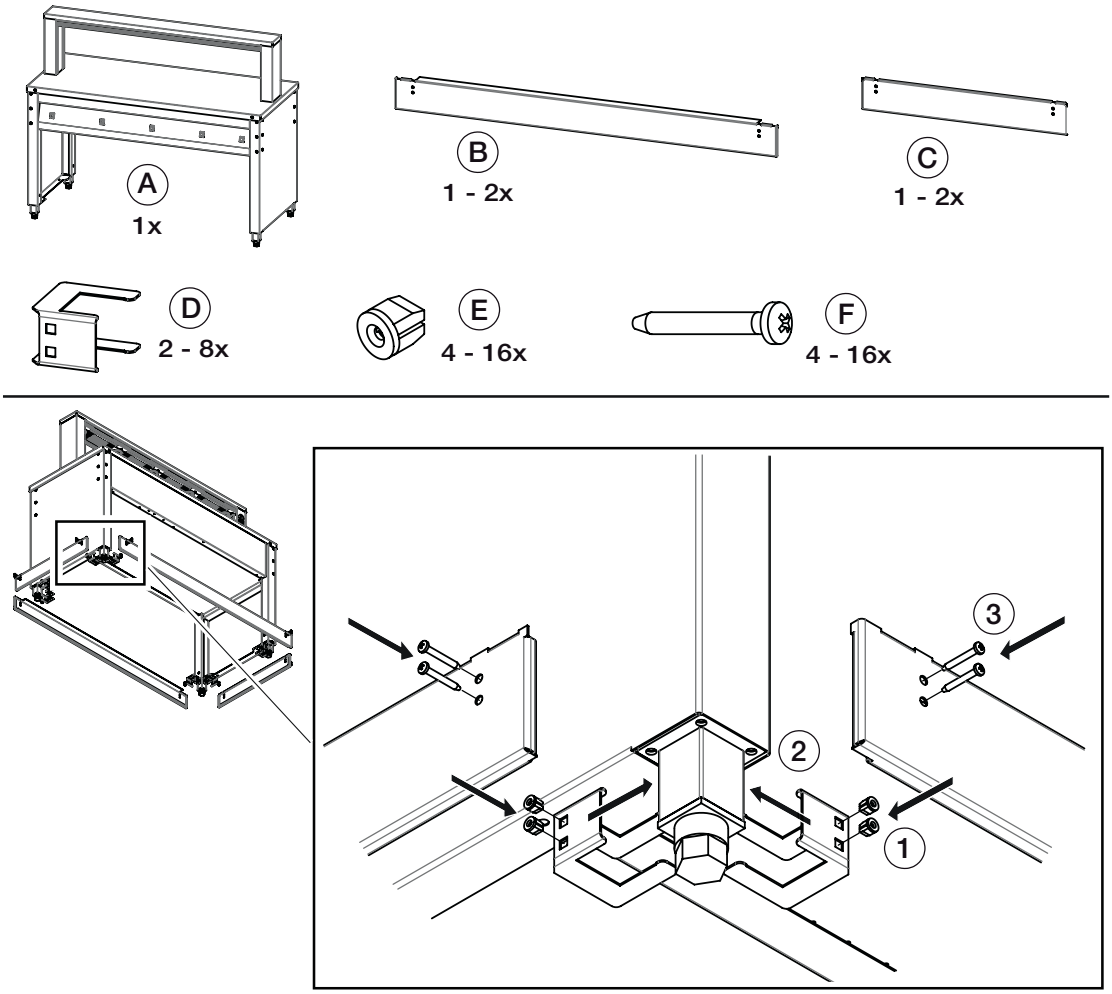

- Install thread inserts E in slot D (1).
- Push slot D over adjustable foot on module A (2).
- Take screws F and fasten skirting panel B or C into thread inserts E in slot D (3).
- Repeat the same assembly steps for each skirting panel.

7.3.3 Mini-catch function and use

Hinge model with mini-catch

- Pull the mini-catch outwards and turn it a quarter of a turn clockwise or anti-clockwise.
  The mini-catch assumes a latched position.
- Fold the attachment up or down as described in the original operating instructions.

To release from the latched position:

- Pull the mini-catch again and turn it a quarter turn in the opposite direction.
  When released, the mini-catch engages automatically.
  The securing mechanism is active.

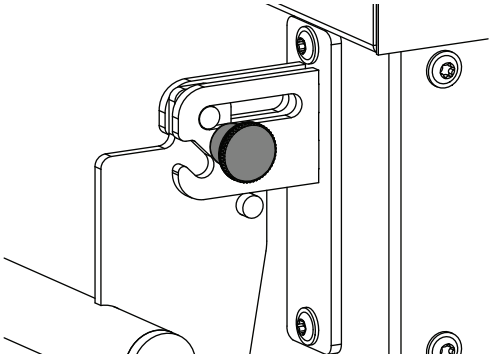

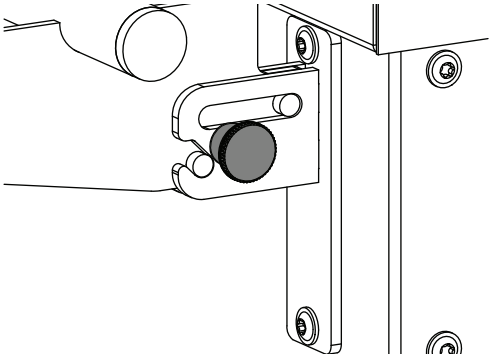

Position of the mini-catch in folded-up/folded-down position:

7.3.4 Folding up and locking attachment into position

⚠ Caution! Risk of injury or damage to the attachment

- The attachment may drop onto the floor if its fastening screws are undone. possibly causing injury or damage.
- Use a second person to hold the attachment to prevent it dropping to the floor before undoing the top fastening screws.

⚠ Caution! Risk of injury due to inadequate fastening

- Tray slides and shelves must always be fastened at both ends using the two screws provided. This will ensure that the necessary load-bearing capacity is achieved.
- When reconfiguring the unit, always secure both brackets with two screws each.

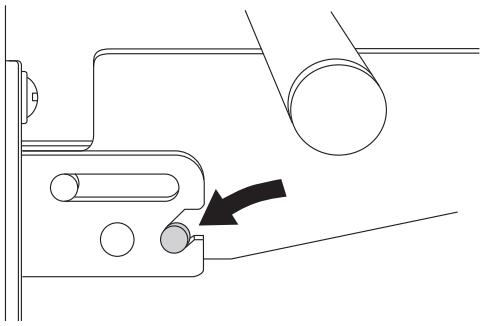

- Lift the attachment until it is about 30° above the horizontal.
- Now push the attachment towards the unit at a downward angle and let it engage into the two side locks.
- Check once more to ensure that the attachment is properly latched into position in the two locks and adjust if necessary.

Folding down the attachment

- Now pull the attachment at an upward angle away from the unit until the two latching devices disengage.
- Fold down the attachment.

Re-mounting attachments

Tray slides and shelves can be moved 10 cm downwards in height or attached to the opposite side.

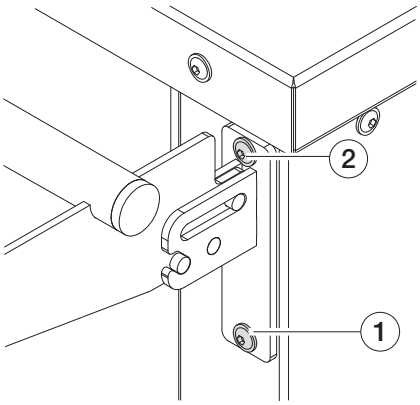

- Use an Allen key to undo and remove the lower screw (1) from the attachment fastening on both sides.
- Fold down the attachment.
- Undo and remove the top fastening screw (2) on both sides while a second person holds the attachment.
- Remove attachment and put to one side if you are not going to use it. Re-insert removed screws into the threaded holes in the underframe and fasten.
- Remove fastening screws from the desired position to mount the attachment.
- Screw the top fastening screw (2) on both sides while a second person holds the attachment in the right position.
- Fold up attachment and then screw the lower fastening screw (1) into position on both sides.

7.3.5 Attaching/removing customer-side front panelling

⚠ Caution! Risk of extremities being crushed or caught

Extremities may get caught between the door and body when doors are closed.

- Ensure that extremities such as hands do not get caught between the unit body and door.

The front panelling on the customer side can be easily replaced and can be attached or removed without any tools.

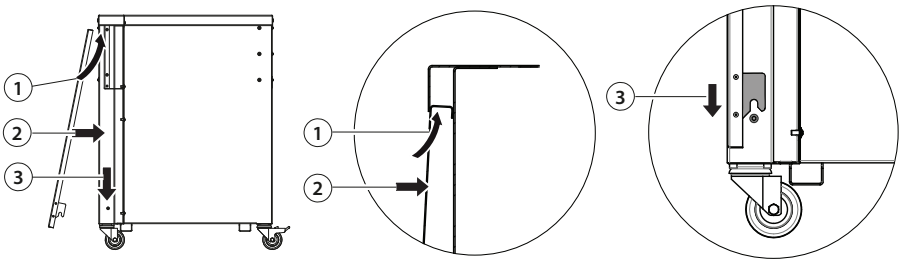

- Push customer-side front panelling (1) under the top cover panel.
- Hang the two suspension brackets (2) onto the projecting screws on the right and left of the underframe (3).

7.3.6 Opening/closing front panelling on operator side

The operator-side front panelling is designed as hinged doors.

- Open it on the push-to-open principle.

7.4 Connecting the unit

ⓘ The unit **must** be connected by suitably qualified personnel!

⚠ Caution! Damage to the unit's electrical system!
The unit electrical system may suffer damage if the unit is not designed for the available mains voltage or frequency.
- Before connecting, make sure that the mains voltage and frequency on the rating plate correspond with those for the mains socket outlet.

⚠ Danger! Fire hazard!
Fire hazard, in particular through naked flames, electric or static sparks generated by static charge, and hot surfaces.
- Avoid naked flames in the usable space or immediate vicinity of the unit.
- In the event of static charge, appropriate countermeasures must be taken (e.g. use of personal protective equipment, antistatic castors or an antistatic conveyor).

⚠ Danger! Short circuit in external units!
A short circuit in an external unit connected to the main unit (e.g. due to overheating in the mains supply lead) can cause an electric shock if you come into contact with the main unit.
- Only connect unit to a mains socket outlet equipped with a residual-current device (RCD)/residual-current circuit breaker, each phase with max. 16 A.

7.4.1 Prerequisites for operation

- ✓ Unit has reached room temperature and is dry
- ✓ No faults detected, no visible damage to unit
- ✓ No person or animal in the unit interior
- ✓ Unit installed and stable, castors locked
- ✓ Protective films in interior and exterior have been removed
- ✓ Ensure that there are no more heat-sensitive objects in the bain-marie wells or the optional heated compartments.

7.4.2 Heating up empty unit for the first time

ⓘ During the initial start-up, the insulation material becomes hot and may cause an unpleasant odour.

B.PRO recommends:
- Heat the bain-marie wells and any optional heated unit compartments for about 2 hours in the empty condition.
- Prepare every bain-marie well as detailed in the instructions.
- "Wet loading with Gastronorm containers (recommended loading method)" on page 31
- So as to save energy, cover the bain-marie wells with suitable lids (such as a GN lid) while they are being heated up.

7.5 Putting unit into operation

- ✓ Unit is switched off
- Install the unit in the designated location.

Appliance with optional braked castors
- Lock castor brakes.

- Ensure that the interior of the appliance is in hygienically faultless condition.
  Clean the appliance if necessary (see Chapter 11 on page 36).
  Before commissioning the unit or disposing of it, always check to ensure that there are no children or animals inside the compartments.
- Make sure that no protective film is left inside the unit compartments or on the exterior of the unit.

- Ensure that there are no heat-sensitive objects in/on the heat bridge, bain-marie wells or the optional heated compartments.
- Ventilate the unit compartments.
- Wear personal protective equipment (e.g. safety footwear) to counteract static charge where necessary.
- Connect the mains plug to the socket outlet.
- Switch on the radiant heaters at the on/off switch.
  The operation indicators LED will illuminate.
  The unit is ready for operation.
- Switch on the heaters for all bain-marie wells (*wet loading recommended*) and the optional heated compartments in the underframe at the relevant on/off switch.
  The operation indicator LEDs on the bain-marie wells and the heated unit compartments light up.
- Change all rotary knobs to the highest setting.
- Heat all radiant heaters, bain-marie wells and the optional heated unit compartments.
- Switch off the heating in all bain-marie wells and the optional heated unit compartments in the underframe at the relevant on/off switch.
- Switch off the radiant heaters at the on/off switch.
  The operation indicator LEDs go out.
- Ventilate and clean unit compartments.

7.5.1 Use the support crossbars

Each bain-marie well can be divided lengthwise by a support crossbar and crosswise with one or two support crossbars.

- When one or two support crossbars are used across the unit, the Gastronorm containers GN 1/2, GN 1/4, GN 2/3, GN 1/3, GN 1/6, GN 2/8 and GN 1/9 can be hung in the bain-marie wells.
- When one support crossbar is used lengthwise, Gastronorm containers GN 2/4, GN 1/4 and GN 1/6 can be hung in a bain-marie well.

ⓘ Support crossbars can be ordered as accessories (see Chapter 17 on page 45) from B.PRO.

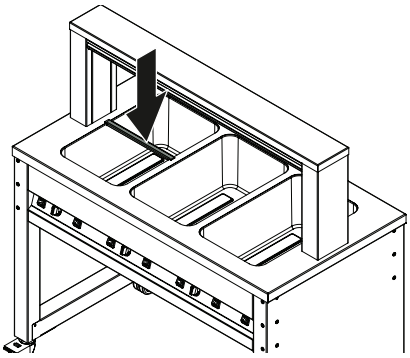

- Insert the corresponding support crossbar or crossbars as necessary.
- Hang Gastronorm containers in the bain-marie wells.

Example of loading with a crosswise support crossbar: one GN 1/2 Gastronorm container and two GN 1/4 Gastronorm containers.

7.5.2 Initial use after a long period of non-use

Cleaning the unit

- Clean the unit thoroughly (see Chapter 11 on page 36).
- Performing a safety inspection.
- Check unit in accordance with standards of series DIN VDE 0701-0702.
- Check mains cable for mechanical damage and excessive deterioration.
- If a defect is present, notify one of the following:
  - In-house, by B.PRO-trained professionals
  - External, B.PRO-trained customer service
  - B.PRO Service

8 Handling and operation

8.1 Connecting external units

⚠ Caution! Damage to the unit's electrical system!
The unit electrical system may suffer damage if the unit is not designed for the available mains voltage or frequency.
- ➨ Before connecting, make sure that the mains voltage and frequency on the rating plate correspond with those for the mains socket outlet.

Unit model with socket outlets
The maximum connected load for socket outlets to connect external units depends on the specific hot buffet equipment. The exact specifications are marked on the socket outlets and are also indicated on the rating plate (page 41).
There is a connection for potential equalisation on the unit lower surface (on right on operator side). Connect units which are operated together via the potential equalisation connection as per the regulations applicable in the country where they are installed.
- ✓ Unit installed and stable
- ✓ Hot buffet connected to power supply
- ✓ Voltage, mains frequency and power consumption for the external unit(s) match the specifications on the rating plate
- ✓ Read and observe original operating instructions for the external unit
- ➨ Move external unit against the hot buffet.
- ➨ Lock castor brakes on a mobile external unit.
- ➨ Connect the external unit plug to the socket outlet on the hot buffet.
  The external unit is now connected to the hot buffet.
- ➨ Repeat the process described above to connect another external unit.

8.2 Switching on heating mode

⚠ Warning! Danger of burns! Hot unit compartments!
When in keeping hot mode, the unit compartments and the Gastronorm containers or other objects contained in them can become hot and cause burns.
- ➨ You must use protection such as protective gloves when handling hot objects.
- ➨ Use U-handles on the Gastronorm containers.

⚠ Warning! Danger of burns! Hot bain-marie well!
While in keeping hot mode, the bain-marie wells and the Gastronorm containers or objects contained within become hot and can cause burns.
- ➨ You must use protection such as protective gloves when handling hot objects.
- ➨ Use U-handles on the Gastronorm containers.

⚠ Warning! Hot lids on Gastronorm containers and hot heat bridges!
Lids which are placed on top of Gastronorm containers and the lower surface of the heat bridge get hot when the radiant heaters are switched on. Risk of burns.
- ➨ Remove lids from Gastronorm containers before switching on the radiant heaters.
- ➨ Do not touch the lower surface of heat bridge.

⚠ Caution! Possible impairment of food quality!
The quality of the food located in the unit may be impaired by a power failure, unit malfunctions or other interruptions during storage.
➨ Dispose of food if necessary.

8.2.1 Switching heating for bain-marie wells on or off and setting setpoint temperature

While in heating mode, the "Bain-marie well heating" operation indicator LEDs show wells are currently switched on.

✓ Unit connected to a socket outlet
➨ Set the rotary knob for the corresponding bain-marie well to the required setting.
The setpoint temperature is set.
➨ On/off switch for bain-marie well heating.
The "Bain-marie well heating" operation indicator LED lights up.
➨ Switching off heating mode.
➨ Turn off on/off switch for bain-marie well heating.
The "Bain-marie well heating" operation indicator LED goes out.

8.2.2 Switching heating for unit compartments on or off and setting setpoint temperature

Unit model with heated unit compartments
While in heating mode, the "Unit compartment heating" operation indicator LED shows whether the compartments are currently switched on. The two unit compartments are always heated together. The temperature in the unit compartments can be read on an optional digital display.

Switching on heating mode

✓ Unit connected to a socket outlet
➨ Set the rotary knob for the unit compartments to the required setting.
The setpoint temperature is set.
➨ Switch on the "Unit compartment heating" on/off switch.
The "Unit compartment heating" operation indicator LED lights up.
➨ Switching off heating mode.
➨ Switch off the "Unit compartment heating" on/off switch.
The "Unit compartment heating" operation indicator LED goes out.

8.2.3 Switching the (optional) radiant heaters on/off

⚠ Warning! Damage to the LED protection glass or shattering of it!
The protection glass may break or shatter when the LED spotlights are switched on. Risk of broken glass in food.
➨ If the LED spotlights are damaged or even if it cannot be safely ruled out that pieces of glass have got onto/into the food, to be on the safe side you must remove **all** food from the serving area and dispose of it.
➨ Thoroughly clean the entire serving area.

⚠ Caution! Danger of burns due to hot underside of the thermal bridge!
The lighting and heat bridge lower surface becomes hot when the radiant heaters are switched on.
➨ To prevent burns, avoid touching this.

A radiant heater is located above each bain-marie well: this helps keep the food hot. The radiant heaters can be switched on for each bain-marie well individually. While in heating mode, the "Radiant heater" operation indicator LEDs show whether the radiant heaters are currently switched on.

Switching on radiant heaters

✓ Unit connected to a socket outlet
➨ Switch on "radiant heaters" on/off switch.
The "radiant heaters" operation indicator LED lights up.

Switching off radiant heaters

➨ Switch off "radiant heaters" on/off switch.
The "radiant heaters" operation indicator LED goes out.

8.2.4 Switching lighting on or off

Unit model with lighting

Switching on lighting

✓ Unit connected to a socket outlet
➨ Check the LED protection glass before switching on the lighting.
➨ Switch on "Lighting" on/off switch.
The "Lighting" operation indicator LED lights up.

Switching off lighting

➨ Switch off "Lighting" on/off switch.
The "Lighting" operation indicator LED goes out.

8.3 Loading the unit

⚠ Caution! Danger of scalding due to escaped condensation water!
➨ Gastronorm containers containing liquid food should always be closed with a sealing lid to prevent hot liquids leaking and to avoid scald hazards.
➨ Keep Gastronorm containers in a horizontal position.

⚠ Caution! Risk of material damage and malfunctions!
If unsuitable containers such as polycarbonate are used, there is a risk of deformation, malfunctions and possible material damage.
B.PRO recommends:
➨ Use stainless steel Gastronorm containers.
Gastronorm containers made of stainless steel have better thermal conductivity and are heat-resistant up to at least +100 °C.

ⓘ We recommend wet loading due to the better heat transfer to the Gastronorm containers.
ⓘ We recommend using Gastronorm containers with universal bow handles as the handles can be used to lift the containers easily out of the unit.
Food should be kept **exclusively** in Gastronorm containers.

Types of loading the bain-marie wells

- Dry loading with Gastronorm containers
- Wet loading with Gastronorm containers (recommended loading method)

8.3.1 Dry loading with Gastronorm containers

Gastronorm containers are hung in the dry bain-marie wells.
When filling with a small amount of food, B.PRO recommends preheating the bain-marie wells.

Pre-heating the bain-marie wells

- ➨ Ensure that no heat-sensitive objects are inside the bain-marie well.
- ➨ Bain-marie well cleaned and dry.
- ➨ Bain-marie well not loaded yet.
- ➨ Connect the mains plug to the socket outlet.
- ➨ Switch on the required bain-marie well at the relevant "Bain-marie well heating" on/off switch.
  The "Bain-marie well heating" operation indicator LED lights up.

Change the setpoint temperature on the rotary knob if necessary.

↳ Switching heating for bain-marie wells on or off and setting setpoint temperature
The bain-marie well is heated to the selected setpoint temperature.

Preheating bain-marie well

Preheating is **not** necessary if a large portion of the bain-marie well is loaded with hot food.
B.PRO recommends:
Small amount of hot food:

- ➨ Pre-heat the unit for about 30 minutes before loading.
  Bain-marie wells pre-heated to approx. +70 °C.

Load bain-marie well with Gastronorm containers

- ✓ Bain-marie well preheated if necessary (if small amount of food used)
- ✓ Gastronorm containers and food heated
- ✓ Gastronorm containers in good condition (e.g. edge not deformed or sharp)
- ✓ Gastronorm containers covered (containers with liquid food provided with sealing lids)
- ➨ Use the support crossbars.

↳ "Use the support crossbars" on page 27

8.3.2 Wet loading with Gastronorm containers (recommended loading method)

Gastronorm containers are hung in the bain-marie wells filled with hot water up to the mark. Filling up to the mark corresponds to the required filling amount of 4 litres.
When filling with a small amount of food, B.PRO recommends preheating the bain-marie wells.

Advantages of wet loading:

- Excellent heat transfer to the Gastronorm container(s) using hot steam
- The water is a good heat reservoir.

⚠ Risk of corrosion! Avoidance of fatigue cracking in bain-marie wells.

- ➨ Avoid fatigue cracking in the bain-marie wells: **Do not** pour cold water into bain-marie wells when they are hot.

The sudden change in temperature can cause micro cracks which act as sites where corrosion can start.

- ➨ Allow bain-marie wells to cool down before pouring cold water into them, or use hot water when filling hot bain-marie wells.

Filling bain-marie wells with water

With wet loading, the bain-marie wells are filled with water up to the mark before preheating and/or loading (corresponds to the required filling amount of 4 litres).
B.PRO recommends:
Shortening the preheating time:

- ➨ Fill the bain-marie wells with hot water.
- ✓ Bain-marie wells cleaned and empty
- ✓ Drain cock of bain-marie wells is closed
- ➨ Fill the bain-marie wells being used up to the mark with hot water.
  (The required filling amount is 4 litres.)

Pre-heating the bain-marie wells

✓ Bain-marie wells being used are filled with 4 litres (required filling amount) of hot water
✓ Bain-marie well not loaded yet
➨ Ensure that no heat-sensitive objects are inside the bain-marie well.
➨ Connect the mains plug to the socket outlet.
➨ Switch on the required bain-marie well at the relevant "Bain-marie well heating" on/off switch.
The "Bain-marie well heating" operation indicator LED lights up.
➨ Change the setpoint temperature(s) on the rotary knob if necessary.
↳ "Switching heating for bain-marie wells on or off and setting setpoint temperature" on page 29
The bain-marie well is heated to the selected setpoint temperature.

Preheating bain-marie well

Preheating is **not** necessary if a large portion of the bain-marie well is loaded with hot food.
B.PRO recommends:
Small amount of hot food:
➨ Pre-heat the unit for about 30 minutes before loading.
Bain-marie wells heated to approx. 70 °C.

Load bain-marie well with Gastronorm containers

✓ Bain-marie wells being used are filled with 4 litres (required filling amount) of hot water each
✓ Bain-marie well preheated if necessary (if small amount of food used)
✓ Gastronorm containers and food heated
✓ Gastronorm containers in good condition (e.g. edge not deformed or sharp)
✓ Gastronorm containers covered (containers with liquid food provided with sealing lids)
➨ Use the support crossbars.
↳ "Use the support crossbars" on page 27

8.3.3 Preheating and loading unit compartment(s)

⚠ Warning! Danger of burns due to hot unit compartments!
When in keeping hot mode, the unit compartments and the Gastronorm containers or other objects contained in them can become hot and cause burns.
➨ You must use protection such as protective gloves when handling hot objects.
➨ Use U-handles on the Gastronorm containers.

Unit model with heated unit compartments
The heated unit compartments are used to store hot food temporarily in Gastronorm containers until the food is served. If the unit compartments are to be used to keep food hot, they must be preheated for *at least 60 minutes* before they can be loaded with food.

Preheating unit compartments

✓ Unit compartments not yet loaded
✓ Unit doors closed
➨ Ensure that no objects which are sensitive to heat are located inside the unit.
➨ Connect the mains plug to the socket outlet.
➨ Switch on heating for compartments with the "Unit compartment heating" on/off switch.
The "Unit compartment heating" operation indicator LED lights up.
Change the setpoint temperature on the rotary knob if necessary.
↳ "Switching heating for unit compartments on or off and setting setpoint temperature" on page 29
➨ Preheat the unit compartments for at least 60 minutes.

Loading unit compartment(s)

✓ Preheat the unit compartments for at least 60 minutes
✓ Food in Gastronorm containers is covered with lids
➨ Open doors to unit compartments.
➨ Insert Gastronorm containers into the unit compartment(s).
➨ Close the unit doors.

8.3.4 Keeping food hot

Warning! Risk of loss of food quality and risks to food safety.
When keeping food warm, the food-specific regulations must be observed, as storing food for too long can impair the quality of the food and create health risks.
- Avoid storing food for longer periods.
- When food is not being removed from Gastronorm containers, keep them closed with their lids fitted, so as to prevent food drying out and avoid the risk of contamination.

If the unit has been disconnected from the power supply (due for example to a changing its location):
- Re-connect the mains plugs and switch on the bain-marie wells and any optional heated unit compartments at the relevant on/off switch.
- Change the setpoint temperature(s) if necessary.
- "Switching heating for bain-marie wells on or off and setting setpoint temperature" on page 29
- Switch on radiant heaters if necessary.
- "Switching the (optional) radiant heaters on/off" on page 29

8.3.5 Removing food

Warning! Danger of burns! Hot bain-marie well!
While in keeping hot mode, the bain-marie wells and the Gastronorm containers or objects contained within become hot and can cause burns.
- You must use protection such as protective gloves when handling hot objects.
- Use U-handles on the Gastronorm containers.

Caution! Danger of scalding due to escaped condensation water!
- Gastronorm containers containing liquid food should always be closed with a sealing lid to prevent hot liquids leaking and to avoid scald hazards.
- Keep Gastronorm containers in a horizontal position.

- Remove lids from Gastronorm containers.
- Remove food from Gastronorm containers.

The unit must be cleaned thoroughly after use.
- "Cleaning and care" on page 36

8.4 Moving the unit to a new location

- "Change of location" on page 11

9 Shutting down

⚠ Caution! Damage to the unit's electrical system!
The unit electrical system may suffer damage if the unit is not designed for the available mains voltage or frequency.
- Before connecting, make sure that the mains voltage and frequency on the rating plate correspond with those for the mains socket outlet.

⚠ Caution! Mould growth in interior!
If the appliance is not used for an extended period of time, mould may form in the interior or odours may be created.
- Ensure ventilation during extended downtimes or decommissioning.

✓ Unit connected to a socket outlet
- Switch off the unit at the on/off switch.
  The operation indicator LED will go out.
- Disconnect the appliance from the power supply:
  Withdraw the mains plug on the mains plug housing from the mains socket.
- Store the mains plug safely, protected from dirt and moisture.
- Empty unit.
- Cleaning the unit. (see Chapter 11 on page 36)
- Move unit to a secure place and store (see Chapter 3.10 on page 11).

10 Troubleshooting

Power indicator LED does not light up – no mains voltage in the unit.

Cause	Measure
Mains plug is unplugged or not plugged in properly.	Plug the mains plug into the socket outlet and ensure it fits properly.
Mains cable is damaged; e.g. a wire is broken (can also occur without external damage).	Have a centre authorised to carry out repairs replace the mains cable. "Repairs" on page 41
Customer's mains connection interrupted.	Have the mains connection re-established by an authorised repair centre. "Repairs" on page 41
Customer-supplied fuse (building fuse) is defective.	Have the customer-supplied fuse checked, and if necessary replaced, by an authorised repair service. "Repairs" on page 41
Unit electrical system faulty.	Notify a centre authorised to carry out repairs. "Repairs" on page 41

The "Bain-marie well heating" operation indicator LEDs light up, but the food is not maintained at an adequate temperature.

Cause	Measure
Setpoint temperature is set too low.	Set a higher setpoint temperature. "Switching heating for bain-marie wells on or off and setting setpoint temperature" on page 29
Unit is exposed to a (strong) draught	Eliminate the cause(s) of the draught or move the unit away from the draught.

Cause	Measure
Temperature control is irregular.	➨ Briefly switch off the heating. ↳ "Switching heating for bain-marie wells on or off and setting setpoint temperature" on page 29 ➨ If this does not solve the problem and the causes we have already mentioned can be ruled out, notify an authorised repair company. ↳ "Repairs" on page 41
Unit electrical system faulty.	➨ Notify a centre authorised to carry out repairs. ↳ "Repairs" on page 41

"Radiant heater" operation indicator LEDs light up, but the food is not maintained at a satisfactory temperature.

Cause	Measure
Defective radiant heaters.	➨ Notify a centre authorised to carry out repairs. ↳ "Repairs" on page 41
Unit is exposed to a (strong) draught	➨ Eliminate the cause(s) of the draught or move the unit away from the draught.
Unit electrical system faulty.	➨ Notify a centre authorised to carry out repairs. ↳ "Repairs" on page 41

The "Unit compartment heating" operation indicator LED lights up, but the food the food is not maintained at an adequate temperature.

Cause	Measure
Setpoint temperature is set too low.	➨ Set a higher setpoint temperature. ↳ "Switching heating for bain-marie wells on or off and setting setpoint temperature" on page 29
Unit electrical system faulty.	➨ Notify a centre authorised to carry out repairs. ↳ "Repairs" on page 41

LED spotlights do not light up – lighting switched on

Cause	Measure
LED spotlights are defective.	➨ Notify a centre authorised to carry out repairs. ↳ "Repairs" on page 41

Corrosion of stainless steel parts

Cause	Measure
Incorrect handling/care.	➨ Notify a centre authorised to carry out repairs. ↳ "Repairs" on page 41 ➨ Ensure proper handling/care.

The unit has external damage

Cause	Measure
Damage during transport, change of location or other external influences.	➨ Shut unit down. ↳ "Shutting down" on page 34 ➨ Secure the unit to ensure it cannot be started up accidentally. ➨ Notify a centre authorised to carry out repairs. ↳ "Repairs" on page 41

11 Cleaning and care

⚠ Warning! Short-circuit due to water penetrating the housing!
Water may penetrate into the housing when cleaning the connected unit and can cause a short circuit or an electric shock.
- Switch off the device.
- Disconnect the appliance from the power supply.
- Withdraw the mains plug on the mains plug housing from the mains socket.
- Store the mains plug safely, protected from dirt and moisture.

⚠ Caution! Danger of slipping on leaked cleaning water!
A danger of slipping exists if cleaning water runs out of the unit during or after cleaning.
- Completely wipe up cleaning water which runs out onto the floor.

⚠ Caution! Material damage!
Stainless steel cleaning and scouring agents scratch the surface.
- Use only cleaning agents and methods approved by B.PRO.

Bringing stainless steel into contact with various substances can cause corrosion.
- Use only cleaning agents authorised by B.PRO.
- Always clean powder-coated unit parts/surfaces correctly. Never use scouring agents, pointed or sharp objects or cleaning agents containing solvents; otherwise, material damage can occur.
- Only clean powder-coated unit parts/surfaces using the approved cleaning methods and agents.

⚠ Warning! Caustic substances!
The acids used for removing areas of corrosion can cause injuries as well as caustic damage to objects (e.g. clothing). Contact with the eyes can cause irreparable damage to vision. In the worst case, injured persons may lose their vision completely. Wear protective clothing (protective eyewear, protective gloves etc.).
- Persons not involved in cleaning must be kept at a distance.

11.1 Information on cleaning stainless steel

Corrosion-resistant stainless steel is a designation for extremely corrosion-resistant and hygienic steels.
The stainless steel currently used at B.PRO (AISI 1.4301) primarily consists of iron, chrome and nickel. The corrosion resistance in corrosion-resistant steel is provided by what is known as a passive layer, formed on the material surface when it comes into contact with oxygen. Damage to the passive layer caused by mechanical impact is automatically repaired if sufficient oxygen is present on the material's surface. The passive layer can be damaged due to the effects of certain aggressive agents. Such substances are also found in low concentrations in drinking water, one example being chloride. When water evaporates, it may produce a critical higher concentration of substances. Grease, limescale, starch and protein deposits can impair the formation or renewal of a passive layer.

The following substances may also cause or advance corrosion if they come into contact with stainless steel:

- Concentrated acids, halogens, such as chloride or bromide, and their salts, and seasoning containing cooking salts
- Acid vapours, which may form when industrial cleaners are used, for example
- Contact with other metals, such as steel or iron
- Contact with iron, such as iron contained in steel wool, chips from pipelines or water containing iron particles

Contact with the aforementioned substances must be avoided to maintain corrosion resistance.

- Observe the following cleaning and care instructions.
  - Stainless-steel surfaces must be kept clean, dry and open to the air at all times.

ⓘ **B.PRO recommends:**

Observe the additional instructions for stainless steel surfaces subject to heavy wear:

- Remove/dry water, moisture and water spots immediately.
- **Do not** allow water, moisture and spots of water simply to evaporate, do **not** allow them to dry out.
- Wipe to remove any visible deposits.
- After each use, and in any case – **at least once a day** – drain the water completely and flush the unit with clean water.
- Then wipe and rub the cleaned surface dry with a soft cloth.
- Do **not** cover the surface after drying.
- Treat the surface with DeepClean Stainless Steel.

Personal protective equipment

- Wear personal protective equipment (e.g. safety footwear, protective gloves, protective eyewear, etc.).
- Observe the cleaning agent manufacturer's instructions (cleaning agent safety data sheets).

11.2 Cleaning interval

- Thoroughly clean and dry the appliance after **each time** it is used.

11.3 Cleaning methods

- **Do not use** steam jet units, high-pressure cleaners, water sprayers or similar cleaning devices.
- Do not use integrated heating systems to dry surfaces under any circumstances.
- Do not use pointed or sharp objects for cleaning.

Prescribed cleaning method for daily routine cleaning

- Wipe clean with a damp cloth

Stubborn stains can be removed with a brush (synthetic or natural bristles).

ⓘ Any other cleaning methods to be used **must** be approved by B.PRO.

11.4 Cleaning agents

The following cleaning agents are suitable for stainless-steel surfaces:

- Commercially available stainless steel cleaning agents without chlorides, such as *DeepClean Stainless Steel*
- Commercially available water-based cleaning agents which do not contain chlorides
- Use commercially available descaling agents based on organic acids or inorganic acids not harmful to stainless steel (such as acetic acid, citric acid, sulfamic acid, phosphoric acid); observe the safety data sheets for the cleaning agents.
- Soft cleaning cloth or damp microfibre cleaning cloth

A list of tested cleaning agents suitable for stainless steel is available from the German Swimming Pools Association (Deutsche Gesellschaft für das Badewesen e.V.) at www.baederportal.com (Reinigungsmitteldatenbank/Liste RE). Further information on cleaning is available on the website of the information office for stainless steel, in the "Publications" section: www.edelstahl-rostfrei.de

Cleaning agents NOT suitable for stainless steel surfaces:

- All cleaning agents that may contain chlorides or hypochlorite (e.g. decalcifiers made with hydrochloric acid, chlorine bleaches)

Cleaning agents suitable for other metal surfaces, powder-coated appliance parts as well as plastic and glass parts:

- Commercially available water-based cleaning agents
- Soft cleaning cloth
- B.PRO microfibre cleaning cloth (use with water only)
- Residue stains, especially grease splashes and accumulations of grease, can be removed with a 30% soft soap solution and the help of a brush with synthetic or natural brushes.
- Glass surfaces can be cleaned with commercially available glass cleaners.

Cleaning agents - NOT suitable for other metal surfaces, powder-coated appliance parts as well as plastic and glass parts:

- Stainless steel cleaning agents or other abrasive cleaning agents
- Floor cloth
- Solvent-based cleaning agents
- All cleaning agents that may contain chlorides or hypochlorite (e.g. decalcifiers made with hydrochloric acid, chlorine bleaches)
- Aggressive corrosion-inducing cleaning agents/disinfectants, such as those based on fluorinated silicic acid, phosphoric acid or hydrochloric and sulphuric acid

- Pointed, sharp, metallic cleaning agents

12 Cleaning the unit

⚠ Caution! Danger of scalding! Hot water!
When wet loading, hot water is present in the bain-marie well. When the hot water is drained, danger of scalding is present.
➨ Allow water to cool down before draining off or wear suitable protective clothing (e.g. protective gloves).

ⓘ **B.PRO recommends:**
Before using chemical cleaning agents, always test their compatibility with the surface on a concealed area. This will prevent any unwanted discolouration or other reactions between cleaners and the surface.
➨ If mineral or metallic dust is picked up during cleaning, continuously rinse out the cleaning aids (such as brushes, micro-fibre cloths) so that traces of the dust particles cannot be deposited on the surface.
➨ You must thoroughly rinse the surface with clean water and dry after every use.
➨ Stainless-steel surfaces must be kept clean, dry and open to the air at all times.

One or more attachments can be removed, depending on the unit model, in order to clean the unit thoroughly.

✓ Unit is switched off
✓ Unit is disconnected from the power supply
✓ Store the mains plug safely, protected from dirt and moisture.
✓ Unit has reached room temperature
✓ No food in unit
✓ Wear personal protective equipment (e.g. safety footwear, protective gloves, protective eyewear, etc.) to counteract static charge
➨ Clean unit with cleaning methods and cleaning agents described above.
➨ After cleaning with a stainless steel cleaning agent, rinse with water and rub dry.

12.4.1 Draining water from the bain-marie wells

ⓘ All bain-marie wells are connected to a common drain. Water no longer required can be drained off via the safety drain valve in the underframe.
✓ Collection container (e.g. Gastronorm container or bucket) with a capacity of at least 4 litres available for each bain-marie well

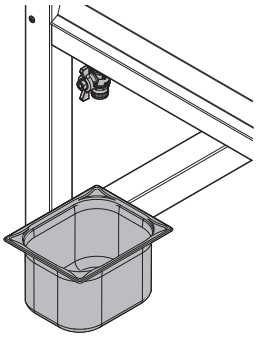

➨ Place a collecting container, such as a Gastronorm container or bucket, beneath the drainage pipe.

ⓘ The safety drain valve is secured against unintentional opening. You can only use it after unscrewing the cap from the drain and opening the handle:

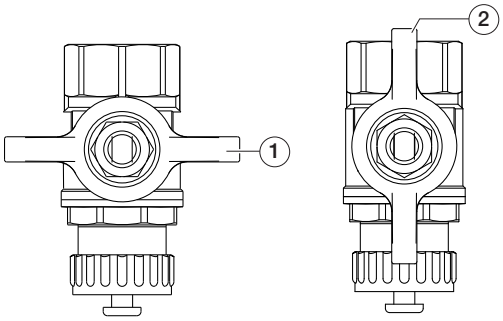

– When the drain valve handle is in the horizontal position (1), the drain valve is closed.
– When the drain valve handle is in the vertical position (2), the drain valve is open.

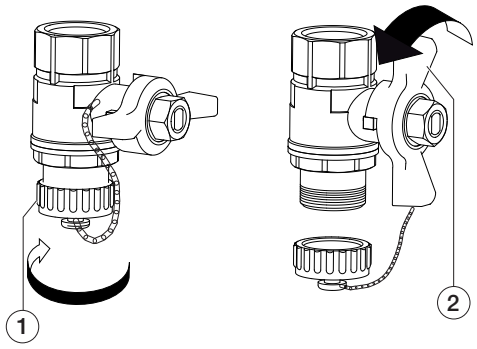

➨ To open the drain valve, unscrew cap (1) from the drain.
➨ Turn the handle (2) anticlockwise by 90°.
The markings are now vertical and the drain valve is open.

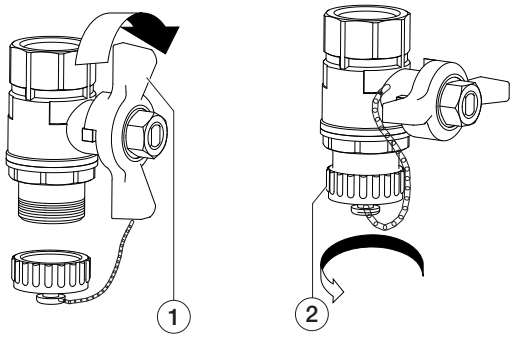

➨ To close the drain valve, turn the handle (1) 90° clockwise.
➨ Screw cap (2) back onto the drain again.

➨ Clean the bain-marie wells and rub them dry.

After cleaning

ⓘ To ensure that the appliance functions correctly, all removed attachments must be refitted after cleaning.
➨ Replace all covers removed during cleaning after cleaning.

13 Maintenance

⚠ Caution! Live components!
Live components may cause an electric shock if touched during maintenance work or when replacing parts on the connected unit.
- Switch off the unit at the on/off switch.
- To disconnect the unit from the power supply, hold the mains plus housing and pull it out of the socket outlet.
- Store the mains plug safely, protected from dirt and moisture.

ⓘ Regular maintenance prevents failure of the unit, extends its operating life and contributes to general value retention.
- Have a suitably trained professional maintain the unit on a regular basis.
- Document the maintenance work that was performed and archive the associated documents accordingly.

Checking stability

Regularly check the stability of the appliance.
- If stability is insufficient, have mounting carried out by one of the following:
  - In-house, by B.PRO-trained professionals
  - External, B.PRO-trained customer service
  - B.PRO Service

Checking the castor brakes

- Check the castor brakes after every change of location to ensure effective working order.
- Apply the castor lock and then move the appliance slightly (do not force it!).
- If braking is inadequate, have the defective castor(s) replaced immediately by one of the following:
  - In-house, by B.PRO-trained professionals
  - External, B.PRO-trained customer service
  - B.PRO Service

Inspecting door seal

- Check the door seal for damage and excessive deterioration after each cleaning (visual inspection).
- In case of damage, contact one of the following for repair:
  - In-house, by B.PRO-trained professionals
  - External, B.PRO-trained customer service
  - B.PRO Service

Performing maintenance on seals

- Treat the seals regularly (monthly) with a commercially available care product.

Having periodical electrical safety inspection carried out

- **At least every 6 months:**
  Have the periodic test of electrical safety performed by a qualified electrician to the standards of the series DIN VDE 0701 and DIN VDE 0702.

Checking the connection cable and mains plug

- **At least every 6 months:**
  Check the connection cable and mains plug for mechanical damage and ageing to DGUV regulation 3 (formerly BGV A3) or the corresponding national regulations.

14 Repairs

➨ Repairs should be performed **exclusively** by the following service centres:
- In-house, by B.PRO-trained professionals
- External, B.PRO-trained customer service
- B.PRO Service

14.4.1 Fault description

ⓘ The unit rating plate is located near to the power inlet to the unit.
Besides an exact description of the defect, B.PRO Service requires the following information from the rating plate:

- Article number
- Model
- Serial number
- Date of manufacture
- Production order number

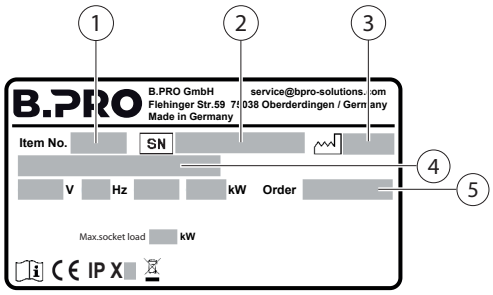

(1) Article number
(2) Serial number
(3) Date of manufacture
(4) Model
(5) Production order number

➨ Defective components, including the mains cable, should be repaired **exclusively** by the following service centres:
- In-house, by B.PRO-trained professionals
- External, B.PRO-trained customer service
- B.PRO Service

14.1 Spare parts

The following information is required when ordering spare parts:

- Designation of spare part
- Article number
- Date of manufacture of the unit
- Quantity
- see the spare parts catalogue in the B.PRO webshop

ⓘ Webshop

14.2 Address

B.PRO GmbH
Flehinger Straße 59
75038 Oberderdingen
Germany

Phone: +49 (0)7045 44 – 81416
Fax: +49 (0)7045 44 – 81508
E-Mail: service@bpro-solutions.com
Internet www.bpro-solutions.com

14.3 Without being commissioned

Warranty claims will only be accepted if the operator can provide proof of complete documentation of the maintenance work/repairs carried out.

ⓘ The warranty will be invalidated if repairs are carried out by anyone else.

15 Disposal

When disposing of old electrical or electronic appliances in regular municipal waste, specific contents in the unit may pose a hazard to the environment and people's health.

ⓘ The appliance can be returned to B.PRO **free of charge**.

- Ensure that the unit and door locks can no longer be used prior to disposal (e.g. by cutting off the mains plug).
- **Do not** dispose of the appliance together with other commercial waste.
- **Do not** dispose of the appliance together with normal municipal waste, but dispose of it separately at a disposal centre for electrical appliances (such as a special waste disposal company).

The unit is marked with this symbol in accordance with DIN EN 50419, Marking of electrical and electronic devices in accordance with Article 15(2) of Directive 2012/19/EU (WEEE) to indicate it requires special disposal.
You must also take into account other possible national regulations concerning disposal.

- Take the emptied unit to a recycling centre or electrical refuse collection site.

ⓘ You can obtain further information on disposal from your dealer or the B.PRO Service Department.

↳ "Address" on page 41

16 Technical data

ⓘ Depending on the model, a unit subject to these operating instructions may also have differing technical data (electrical specifications, dimensions). The mandatory information is provided on the rating plate or in the specific order documents and/or on drawings.

General data

Protection type	IPX4 (the unit is protected against splashed water at an angle on all sides).
Bain-marie well temperature range	Adjustable from +30 °C to +95 °C
Unit model with heated unit compartments	
Temperature range for unit compartments:	Adjustable from +30 °C to +85 °C
Number of support ledges:	6 pairs per compartment
Spacing between support ledges:	57.5 mm

Electrical data

Parameter	Values
Voltage	220–240 V, 1 N PE, 50-60 Hz 380-415 V, 3 N PE, 50-60 Hz
Max. power consumption in the unit	You will find specifications on the rating plate
Max. power consumption per socket outlet	You will find specifications on the rating plate
LED spotlights (optional)	4 watts per LED spotlight
Ceramic radiant heaters (optional)	200 watts per radiant heater

Dimensions (standard model)

Model	Length without shelves in mm	Width in mm with one tray slide folded down/up	Standard height* in mm	Height with bridge in mm
BASIC LINE W-3	1255	775 / 990	900	1305
BASIC LINE W-4	1595	775 / 990	900	1305

** The standard height increases by 60 mm if the optional castors 125 mm in diameter are used.*

Dimensions with accessories

Model	Length in mm with one shelf folded down/up	Length in mm with two shelves folded down/up	Width in mm with two tray slides folded down/up
BASIC LINE W-3	1350 / 1560	1440 / 1865	874 / 1302
BASIC LINE W-4	1690 / 1900	1780 / 2205	874 / 1302

Capacity (standard model)

Model	Capacity with end-to-end top surface	Capacity per unit compartment	Basic module dimensions without attachments, in mm (length x width x height)
BASIC LINE W-3	3 GN 1/1-200	—	1255 x 690 x 900
BASIC LINE W-4	4 GN 1/1-200	—	1595 x 690 x 900
BASIC LINE W-3 with heated underframe	3 GN 1/1-200	1 x GN 1/1-200 or 2 x GN 1/1-150	1255 x 690 x 900
BASIC LINE W-4 with heated underframe	4 GN 1/1-200	1 x GN 1/1-200 or 2 x GN 1/1-150	1595 x 690 x 900

Weight

Model	Empty weight in kg	Max. load in kg
BASIC LINE W-3	85	185
BASIC LINE W-4	110	160
BASIC LINE W-3 with heated underframe	100	170
BASIC LINE W-4 with heated underframe	125	145

Load-bearing capacity

Component/accessory part	Permitted surface load in kg
Tray slide	25
Shelf/plate slide	25
Unit base	100
Highline sneeze guard (customer or operator side)	10

Environment

Ambient conditions – operation

Parameter	Values
Temperature	+15 °C to +38 °C
Relative humidity	without condensation

Ambient conditions – storage, transport

Parameter	Values
Temperature	–10 °C to +38 °C
Relative humidity	without condensation

Emissions

Workplace-related sound level of the appliance: >70 dB(A).

Materials

Component/accessory part	Materials
Lighting bridge/heating bridge	Top surface: Stainless steel
Tray slide, plate slide, shelf:	Unit base: Stainless steel, Resopal
Sneeze guard:	Toughened safety glass
Unit body, underframe:	Powder-coated thin sheet
Front panelling:	Powder-coated thin sheet (optional stainless steel or particle board faced with Resopal)

17 Ordering information and accessories

Ordering information

Designation / Article	Article number / Document number
BASIC LINE W-3	381877
BASIC LINE W-4	381878
BASIC LINE W-3 KIDS	381897
BASIC LINE W-4 KIDS	381898
Operating instructions	154843
B.PRO microfibre cleaning cloth	126999
DeepClean Stainless Steel cleaning and care agent	511895
Gastronorm containers	B.PRO price list
Lid for Gastronorm container	B.PRO price list
Support crossbars	B.PRO price list

18 Standards, guidelines, inspection seal

The unit is in compliance with the fundamental requirements specified in the applicable product standards in their latest version when it is delivered.

18.1 Directives for CE marking/EU declaration of conformity

Where applicable, the unit is in compliance with the fundamental requirements specified in the following regulations/guidelines in their latest version when it is delivered.

- 1935/2004: Regulation on materials and articles intended to come into contact with food
- 2006/42/EG: Machinery Directive
- 2014/35/EU: Low Voltage Directive
- 2014/30/EU: EMC Directive
- 2011/65/EU: RoHS Directive
- 2014/68/EU: Pressure Equipment Directive

18.2 Rules, regulations

The following rules, regulations, German Employers' Liability Insurance Association rules and any other applicable provisions for countries of use must be observed in their latest version when handling and using this unit.

- EC No. 852/2004: Regulation on the hygiene of foodstuffs
- DGUV regulation 110-003: Kitchen industry
- DGUV Regulation 3: Accident prevention regulations for electrical facilities and devices

ⓘ You can obtain a copy of the EU declaration of conformity from the B.PRO Service/Sales Team on request.

19 Maintenance work - form to be completed

Unit model:	
Article number:	
Serial number:	

Date	Name legible in block letters	What was checked/serviced/ replaced/repaired?	Company stamp of the contracted company	Signature

Unit model:	
Article number:	
Serial number:	

Date	Name legible in block letters	What was checked/serviced/ replaced/repaired?	Company stamp of the contracted company	Signature

Doc.no. 154843 BasicLine V3.1 en – 2025/01

B.PRO GmbH
P.O. Box 13 10
75033 Oberderdingen
GERMANY
Phone +49 (0)7045 44 - 81416
Fax +49 (0)7045 44 - 81508
E-mail service@bpro-solutions.com
Internet www.bpro-solutions.com

B.PRO
CATERING SOLUTIONS