document id.: 20.30395.XXX-501-09-A / state: 230 - released
view date: 2019-06-04 15:59:29 / user: BENDER
item id.: 20.30395.010-00/00A / SAP material state: 2F

ITEM NO.	QTY.	DESCRIPTION	PART NUMBER	MATERIAL
1	1	Heating element / Isıtıcı eleman	-	1.4541
2	1	Flange / Flanş	25 100 876	Hot-dip aluminized steel DX53D+AS120 - DIN EN 10 327
3	2	Bush Insulator / Boncuk	522 204	Stealan
4	2	Faston tab. / Fiş	25 800 098	DC03+C290-MB-RL
5	1	Ground faston tab. / Topraklama fişi	610 178	Fe.Ni
6	3	Fixation element / Sabitleme elemanı	24 114 90	1.4301
7	3	Saddle clamp / Kenetleme elemanı	25 300 302	1.4301

EGO NO	CUSTOMER (MUSTERI) NO	BUSH INSULATOR(BONCUK)NO
20.30395.000		522 204 Beyaz (White)
20.30395.010		522 204 Beyaz (White)
20.30395.020		522 204 Beyaz (White)
20.30395.030		522 204 Beyaz (White)

Verilmeyen radüsler 13 mm (Boru merkezinden)
Radiuses without 13 mm (Midlle of the tube)

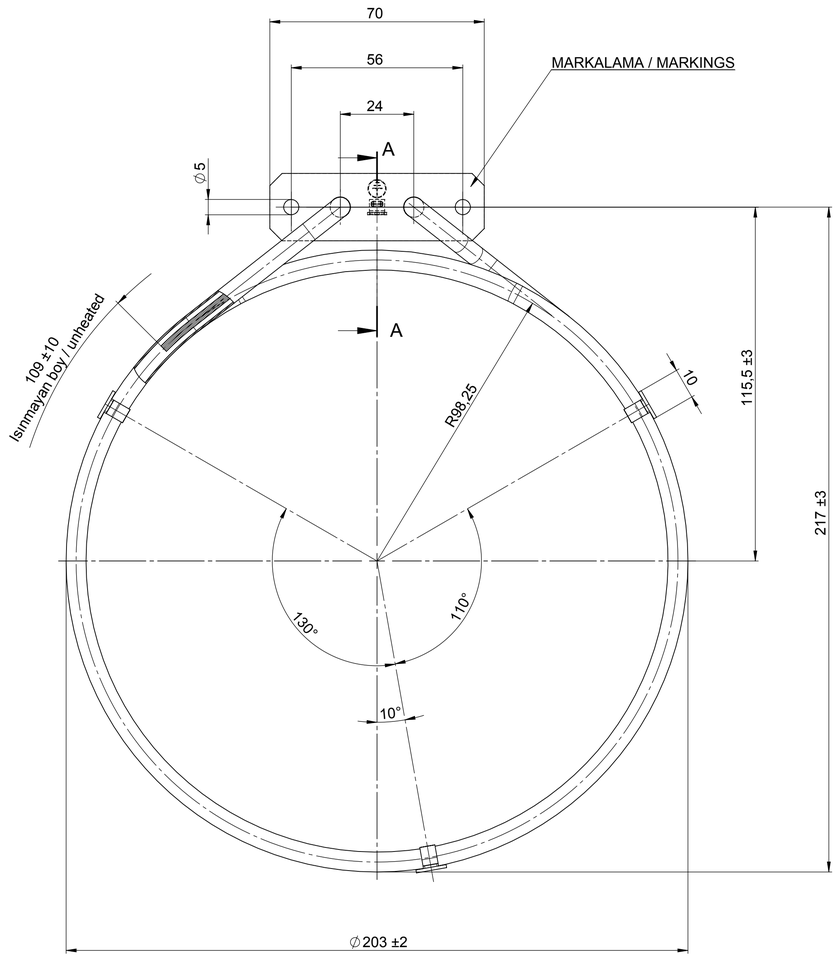

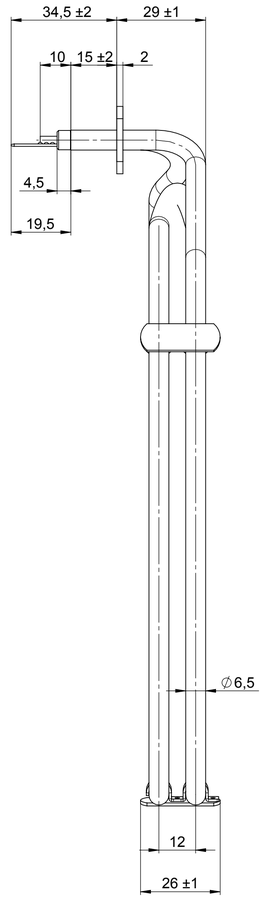

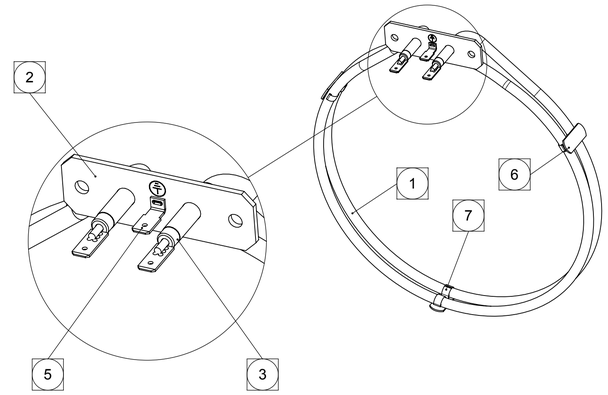

MARKALAMA / MARKINGS

1 - E.G.O İşareti. / E.G.O sing.
2 - VDE İşareti. / VDE sing.
3 - 9 Mamul Nr. / 9 Type Nr.
4 - Watt. / Wattage.
5 - Volt. / Voltage.
6 - Üretim Tarihi. / Date code.

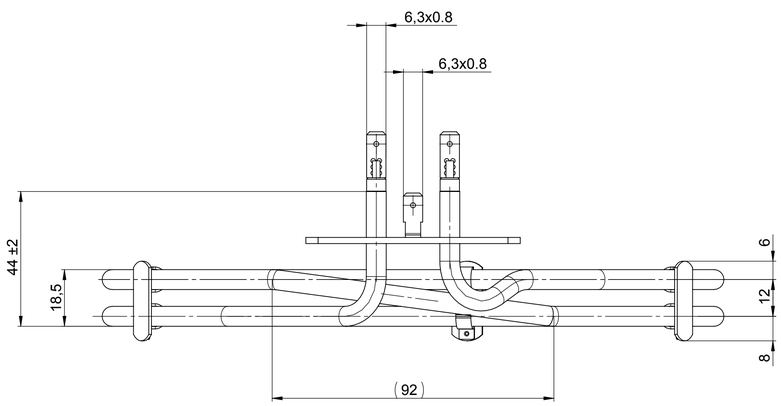

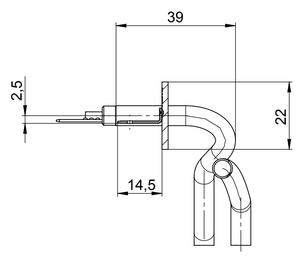

SECTION A-A

REV.	DESCRIPTION	DATE	APPROVED
3	2411622 bugel yerine 25300302 bugel kullanıldı.	17.10.2018	Enes Kalıpçıoğlu
2	Fe.Zn. flanş yerine Fal flanş kullanıldı. 42.7704.021 sabitleme elemanı yerine 2411490 sabitleme elemanı kullanıldı.	14.07.2014	Enes Kalıpçıoğlu

Change	DRAWING NO	P (w)	V (v)	HIGH VOLTAGE TEST	LOAD	HTL	AC	DT	TT	TUBE MATERİAL W.Nr.	WB	OR	VD	PZ	TERMİN PİNS	DATE	NAME
	20.35395.030	1500	230	1500	6.88	1067		6.5	0.5	1.4541				VDE		14/07/2014	H.Günal
	20.35395.020	1100	230	1500	5.05	1067		6.5	0.5	1.4541				VDE		14/07/2014	H.Günal
	20.30395.010	760	230	1500	3.49	1067		6.5	0.5	1.4541				VDE		14/07/2014	H.Günal
	20.30395.000	380	230	1500	1.74	1067		6.5	0.5	1.4541				VDE		14/07/2014	H.Günal

APPROVAL MARK

FA. BLANCO

Tolerance off non marked dimensions ISO 2768 vL

6 mm'ye kadar	±0.5	400-1000 mm	±4
6 -30 mm	±1	1000-2000 mm	±6
30-120 mm	±1.5	2000-4000 mm	±8
120-400 mm	±2.5		

Tüp rezistaslarımız aşağıdaki VDE ve UL şartlarını yerine getirir.

VDE
DIN VDE 0700 Teil I/11.90
DIN VDE 0700 Teil IA2/11.91
Yüksek Gerilim : 1250 V. 1 dk.
Kaçak Akım : 0.75 mA/kW,max 5mA
Güç Toleransı : +5% - -10%
Mamül sınıfı : Klasse III

UL
UL File E68529

This document is exclusively committed to you for the agreed purpose. Any kind of duplication, utilization or communication of its content is prohibited, if not expressly conceded otherwise. Violators are committed to pay compensations. Any claims of existing or future property rights remain unaffected.

3	C02636	2018-10-17	CAD	Date	Name
2	C01691	2014-07-14	Creat.	2018-10-17	HGUNAL
Cha.	Information No.	Date	Proc.	2018-10-17	HGUNAL
F.Rel.	ILK YAYIN	2014-07-14	Rel.	2018-10-17	HGUNAL

Blank No. EN Mat.No.
Material
Scale Unit mm
Scale 1:1
Surface Texture ISO 1302
General Tolerances ISO 2768-vL

Designation
EGO TUBULAR HEATING ELEMENT
EGO TUP REZISTANS

E·G·O

Drawing No. 20.30395.XXX-501-09-A
Stat. F
Sheets
Doc.
Ex.Doc.

Origin 20.30395.XXX-301-07
Repl.for
Repl.by
Ref.