document id.: 20.28907.XXX-501-11-A / state: 230 - released
view date: 2022-02-09 14:11:16 / user: BISSGM
item id.: 20.28907.000.00/69A / SAP material state: 2F

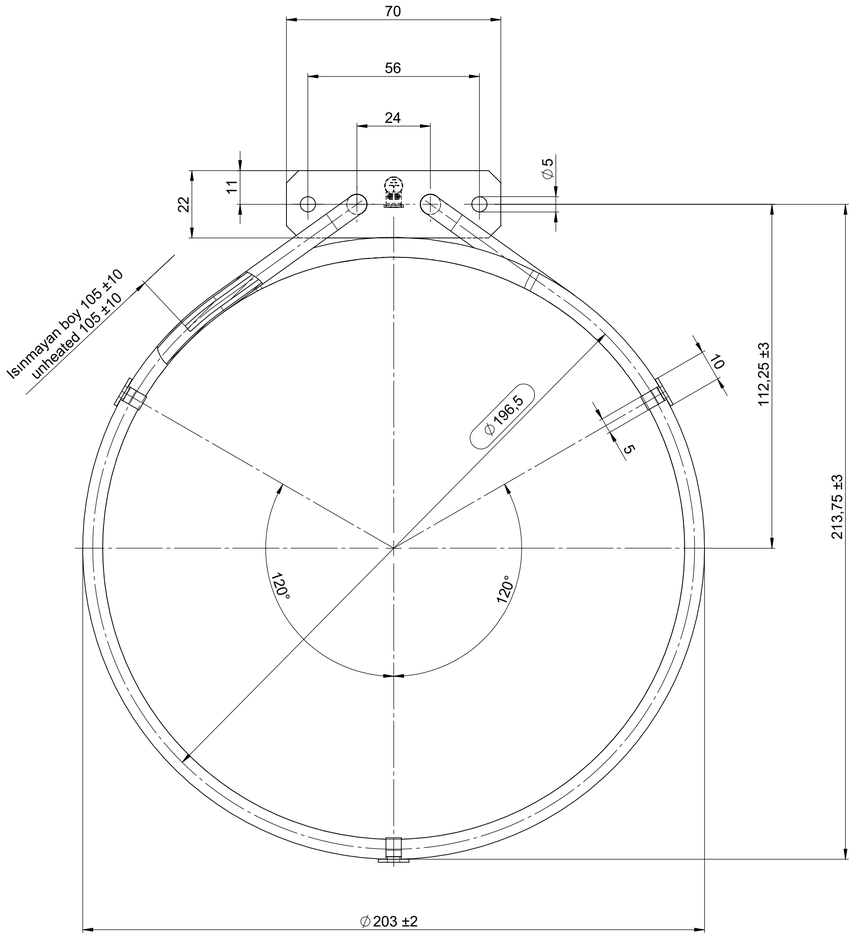

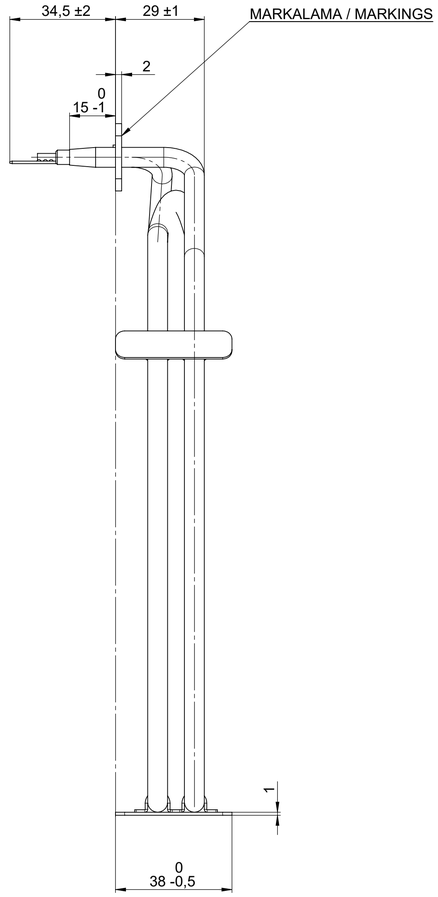

ITEM NO.	QTY.	DESCRIPTION	PART NUMBER	MATERIAL	PART NUMBER 2
1	1	Heating element / Isıtıcı eleman		1.4541	
2	1	Flange / Flanş	25 100 876	Hot-dip aluminized steel DX53D+AS120 - DIN EN 10 327	
3	2	Bush ınsulator / Boncuk	27.100.0XX	PTFE / Saf Teflon	
4	2				
5	1	Faston tab. / Fiş	610 178	Fe.Ni	
6	3	Fixation element / Sabitleme elemanı	25 300 102	1.4301	42.7704.003
7	3	Saddle clamp / Kenetleme elemanı	25 300 130	1.4301	

Max. boru ucu dayanım sıcaklığı: ST 250°C
Max. temperature of sealand in area of tube end : ST 250°C

Max. boru yüzey sıcaklığı: TT 760°C
Max. temperature of tube surface : TT 760°C

Verilmeyen radüsler R10 + 3 mm (Boru merkezinden)
Radiuses unmentioned 10 + 3 mm (Midlle of the tube)

MARKALAMA / MARKINGS

1 - Watt / Wattage
2 - Volt / Voltage
3 - Üretim tarihi / Producer`s date code
4 - E.G.O işareti / E.G.O. name and signs
5 - 9 - Ego kodu / 9 - Type code
6 -Onay işareti / Approval signs

Onay işareti için tablo'ya bakınız
Please see the table for approval signs

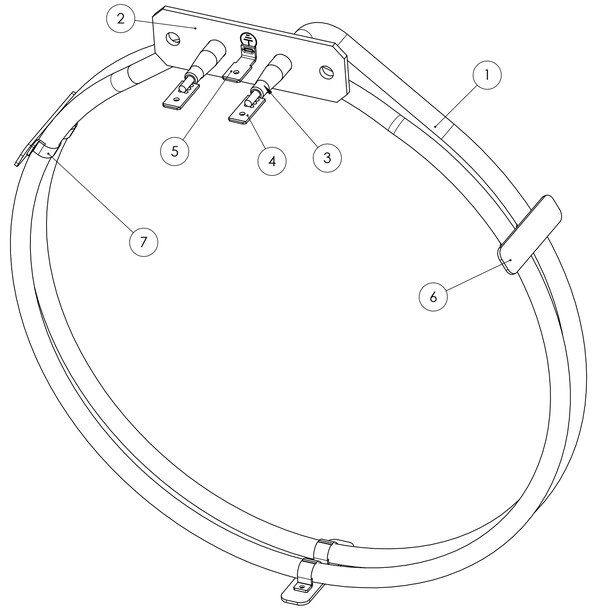

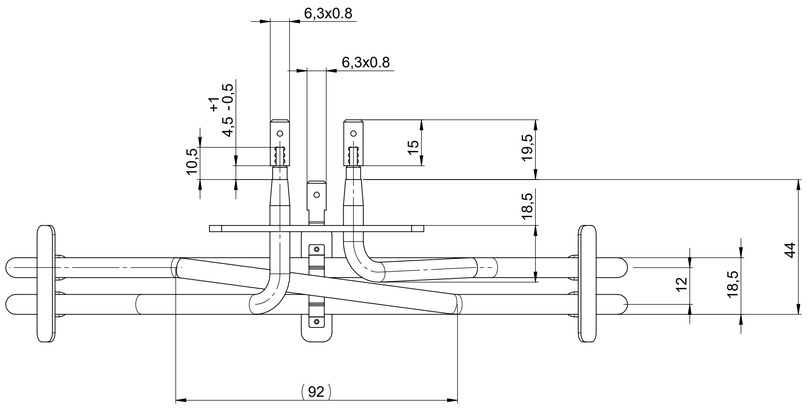

REV.	DESCRIPTION	DATE	APPROVED
8	Markalama bilgileri ve ölçüler güncellendi.	8.03.2021	Osman ÖZKAN
7	Seramik boncuk yerine PTFE boncuk kullanıldı.	30.10.2020	Osman ÖZKAN
6	42.7032.47X Fe.Zn. Flanş yerine 25100876 FAL flanş,Ego Tr standart parçası kullanıldı	11.04.2014	Mustafa Çiçek

Boncuk No Bush insulator No	Müşteri No Customer No	Ego No / Type No	P [W]	P-Tol [%]	U [V]	HV [V]	Load [W/cm²]	HL [mm]	ØT [mm]	WT [mm]	TM	App	VDE / UL	Date / Name
27 100 014 Beyaz / White	-	20.28907.030	1500	+5/-10	230	1250	6.90	1070	6.5	0.5	1.4541	GS		08/03/2021 A.TALU
27 100 014 Beyaz / White	-	20.28907.020	2750	+5/-10	230	1250	12.60	1070	6.5	0.5	1.4541	GS		08/03/2021 A.TALU
27 100 020 Yeşil / Green	-	20.28907.010	1800	+5/-10	240	1250	8.20	1070	6.5	0.5	1.4541	GS		08/03/2021 A.TALU
27 100 014 Beyaz / White	-	20.28907.000	1800	+5/-10	230	1250	8.20	1070	6.5	0.5	1.4541	GS		08/03/2021 A.TALU

Tolerance off non marked dimensions ISO 2768 vL

Marks approval

0 - 3 mm	-
3 - 6 mm	±0.5
6 - 30 mm	±1
30 - 120 mm	±1.5
120 - 400 mm	±2.5
400 - 1000 mm	±4
1000 - 2000 mm	±6
2000 - 4000 mm	±8

This document is exclusively committed to you for the agreed purpose. Any kind of duplication, utilization or communication of its content is prohibited, if not expressly concoded otherwise. Violators are committed to pay compensations. Any claims of existing or future property rights remain unaffected.

8	C03545	2021-03-16			
7	C03545	2021-03-16	CAD	Date	Name
6	C01627	2017-02-24	Creat.	2021-03-08	TALUA
Cha.	Information No.	Date	Proc.	2021-03-08	TALUA
F.Rel.	ILK YAYIN	2014-04-11	Rel.	2021-03-08	TALUA

Blank No. EN Mat.No.
Material
Surface Texture ISO 1302
General Tolerances ISO 2768-vL

Scale Unit mm
Scale 1:1

Designation
EGO TUBULAR HEATING ELEMENT
EGO TUP REZISTANS

GORENJE

E·G·O

document id.
20.28907.XXX-501-11-A

Stat. F | Sheets | Doc. | Ex.Doc.

Origin ET/20.28907.XXX-301-08 | Repl.for | Repl.by | Ref.